MS-7037

Version 10B
02/15/2006 Update

Intel (R) Springdale (GMCH) + ICH5 Chipset
Intel Northwood & Prescott mPGA478B Processor

CPU:

Intel Northwood/Prescott - 3.6G & Above

System Chipset:

Intel Springdale - GMCH (North Bridge)
Intel ICH5 (South Bridge)

On Board Chipset:

CLOCK -- Cypress CY28405

On Board Chipset:

BIOS -- FWH EEPROM 4M
AC'97 Codec -- REALTEK / ALC655
LPC Super I/O -- W83627THF-AW
LAN - REALTEK RTL8110S/8100C

Main Memory:

DDR * 2 (Max 2GB)

Expansion Slots:

PCI2.3 SLOT * 3
AGP4X/8X SLOT * 1

ST PWM:

Controller: ST6710

ERP BOM	Function Description	
501/601-7037	Opt : GLS	865G-A2+ICH5,W/LAN-8100,W/655,WO/1394-6307
01S---010	IL-->GLS	WO/Game port
501/601-7037	Opt : A	865G-A2+ICH5,W/LAN-8100,W/655,W/1394-6307
		W/internal Amplifier SSM2211S
501/601-7037	Opt : VLS	865GV+ICH5,W/LAN-8100,W/655,WO/1394
02S---020	VL-->VLS	WO/Game port
501/601-7037	Opt :PILS	865PE-A2+ICH5,W/LAN-8100,W/655,W/1394-6307
03S---040	PIL-->PILS	WO/Game port, WO/VGA port
501/601-7037	Opt : GFIS	865G-A2+ICH5,W/LAN-8110S,W/655,W/1394-6307
04S---030	GF-->GFIS	WO/Game port
501/601-7037	Opt : VFIS	865GV+ICH5,W/LAN-8110S,W/655,W/1394-6307
06S---050		WO/Game port
501/601-7037	Opt : FS	865GV+ICH5,W/LAN-8110S,W/655,WO/1394-6307
09S---		WO/Game port
501/601-7037M2		865G-A2+ICH5,W/LAN-8100,W/655,WO/1394-6307
		WO/Game port
501/601-7037L2	Opt : VLS	865GV+ICH5,W/LAN-8100,W/655,WO/1394
		WO/Game port

Title	Page
Cover Sheet	1
Block diagram	2
Intel µPGA478B CPU - Signals	3
Intel µPGA478B CPU - Power	4
Intel Springdale - Host Signals	5
Intel Springdale - Memory Signals	6
Intel Springdale - AGP & LDT Signals	7
Intel ICH5 - PCI & IDE & AC97 Signals	8
Intel ICH5 - Other Signals	9
Clock - Cypress CY28405 & BIOS	10
DDR System Memory 1 , 2	11-12
VGA Connector	13
SIO-W83627THF & KB/MS & FDD	14
COM,LPT	15
AGP SLOT & FAN CONTROL	16
PCI Slots 1 & 2 & 3	17
LAN RTL8110S/8100C	18
ALC655 / Connectors	19
USB CONNECTORS	20
IDE & SATA & Game port	21
ATX, FRONT PANEL	22
ACPI Controller MS7	23
VRM10 - ST6710	24
MEM,VCC_DAC & VTT Controller	25
VIA 6307/6306 1394	26
PULL HIGH RESISTORS & RTC	27
GPIO & JUMPER SETTING	28
POWER DELIVERY & MANUAL PART	29
REVISION HISTORY	30

Block Diagram

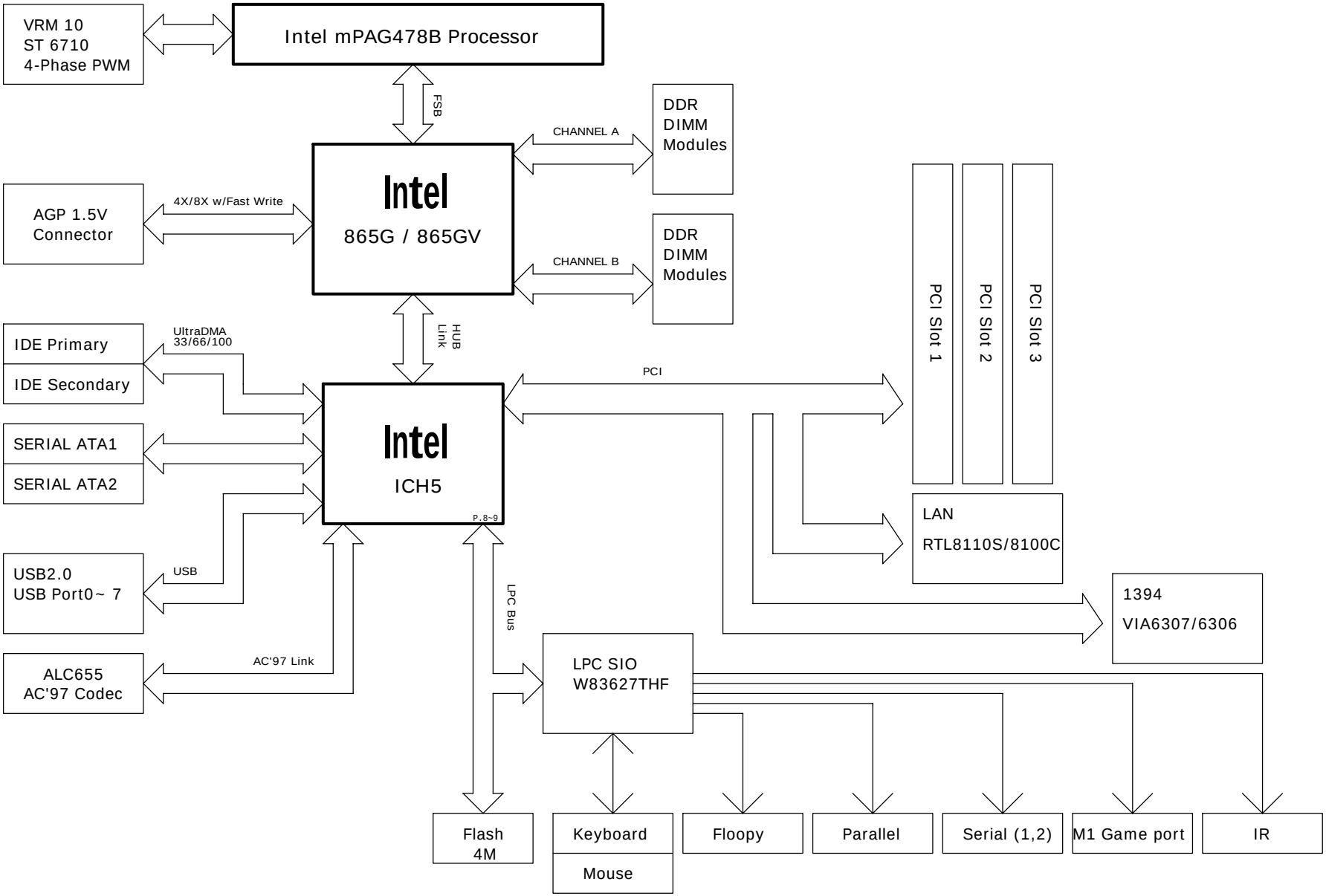

Micro-Star	Title MS-7037	Rev 10B
Document Number BLOCK DIAGRAM		
Last Revision Date: Friday, March 03, 2006	Sheet 2 of 28	

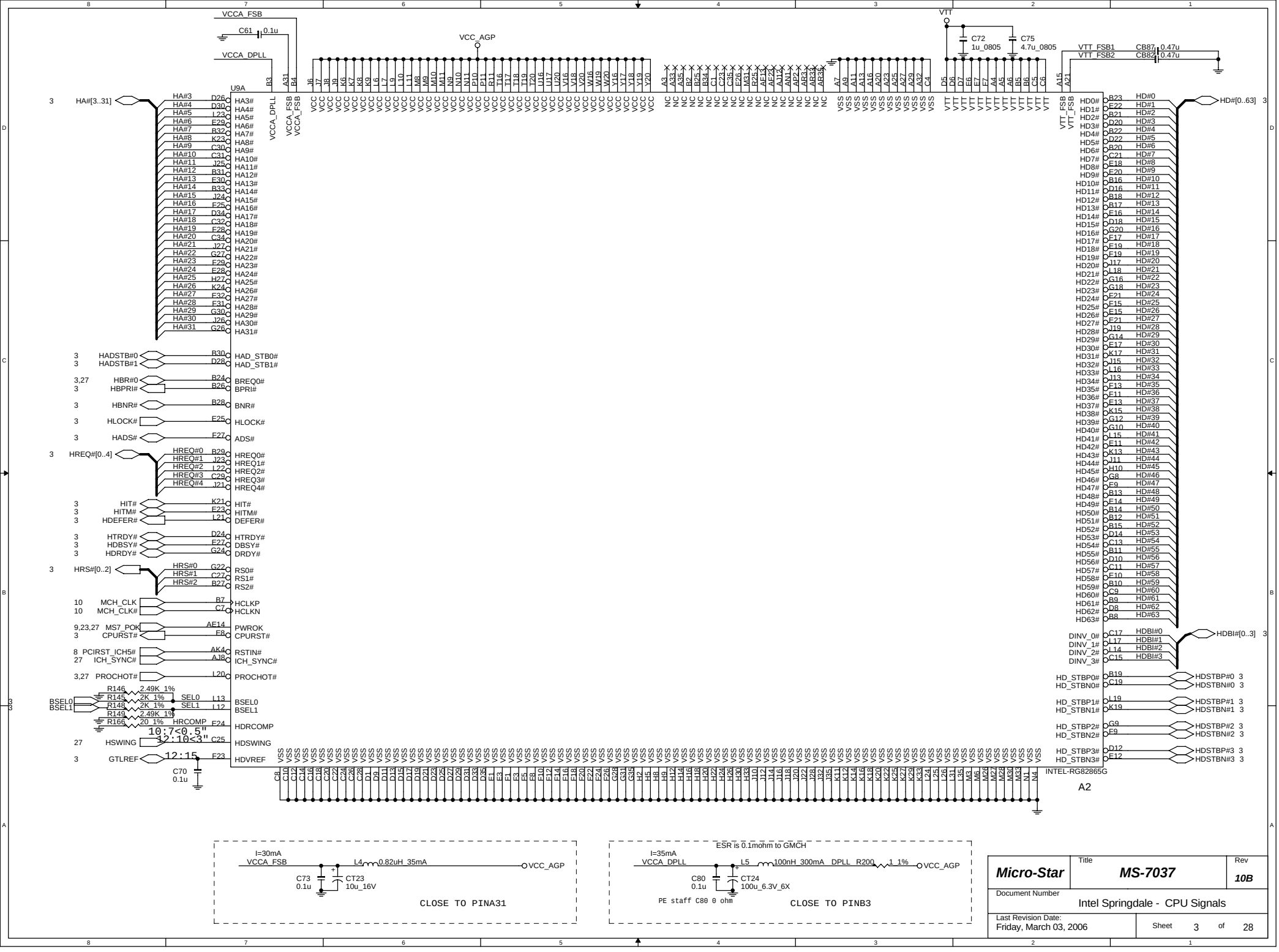
VCCA_FSB
C61 0.1u
VCCA_DPLL
VCC_AGP
VTT
C72 1u_0805
C75 4.7u_0805
VTT_FSB1 CB87 0.47u
VTT_FSB2 CB82 0.47u
U9A
HA#[3..31]
HADSTB#0
HADSTB#1
HBR#0
HBPRI#
HBNR#
HLOCK#
HADS#
HREQ#[0..4]
HIT#
HITM#
HDEFER#
HTRDY#
HDBSY#
HDRDY#
HRS#[0..2]
MCH_CLK
MCH_CLK#
MS7_POK
CPURST#
PCIRST_ICH5#
ICH_SYNC#
PROCHOT#
BSEL0
BSEL1
HSWING
GTLREF
C70 0.1u
HD#[0..63]
HDBI#[0..3]
HDSTBP#0
HDSTBN#0
HDSTBP#1
HDSTBN#1
HDSTBP#2
HDSTBN#2
HDSTBP#3
HDSTBN#3
INTEL-RG82865G
A2
I=30mA
VCCA_FSB
L4 0.82uH_35mA
VCC_AGP
C73 0.1u
CT23 10u_16V
CLOSE TO PINA31
ESR is 0.1mohm to GMCH
I=35mA
VCCA_DPLL
L5 100nH_300mA
DPLL_R200 1_1%
C80 0.1u
CT24 100u_6.3V_6X
PE staff C80 0 ohm
CLOSE TO PINB3
Micro-Star
Title
MS-7037
Rev
10B
Document Number
Intel Springdale - CPU Signals
Last Revision Date:
Friday, March 03, 2006
Sheet 3 of 28

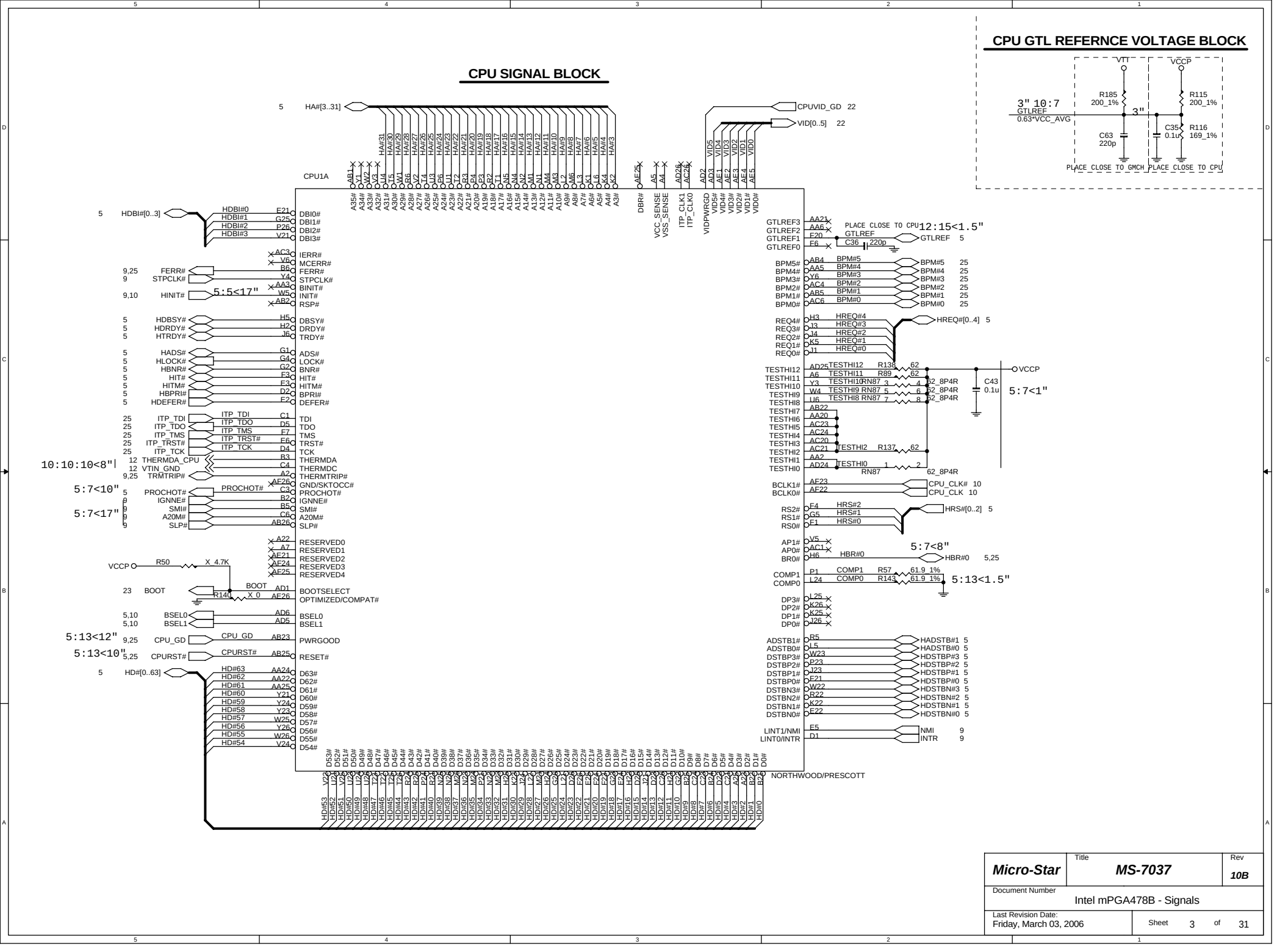
CPU SIGNAL BLOCK
CPU GTL REFERNCE VOLTAGE BLOCK
CPU1A
NORTHWOOD/PRESCOTT
HA#[3..31]
CPUVID_GD 22
VID[0..5] 22
HDBI#[0..3]
HD#[0..63]
HREQ#[0..4] 5
HRS#[0..2] 5
GTLREF 5
VCCP
VTT
R185 200_1%
R115 200_1%
R116 169_1%
C63 220p
C35 0.1u
3" 10:7
GTLREF
0.63*VCC_AVG
PLACE CLOSE TO GMCH
PLACE CLOSE TO CPU
12:15<1.5"
5:5<17"
10:10:10<8"
5:7<10"
5:7<17"
5:7<1"
5:7<8"
5:13<1.5"
5:13<12"
5:13<10"
R50 X 4.7K
R140 X 0
R137 62
R138 62
R89 62
R57 61.9 1%
R143 61.9 1%
C43 0.1u
62_8P4R
CPU_CLK# 10
CPU_CLK 10
HBR#0 5,25
NMI 9
INTR 9
Micro-Star
Title
MS-7037
Rev
10B
Document Number
Intel mPGA478B - Signals
Last Revision Date:
Friday, March 03, 2006
Sheet 3 of 31

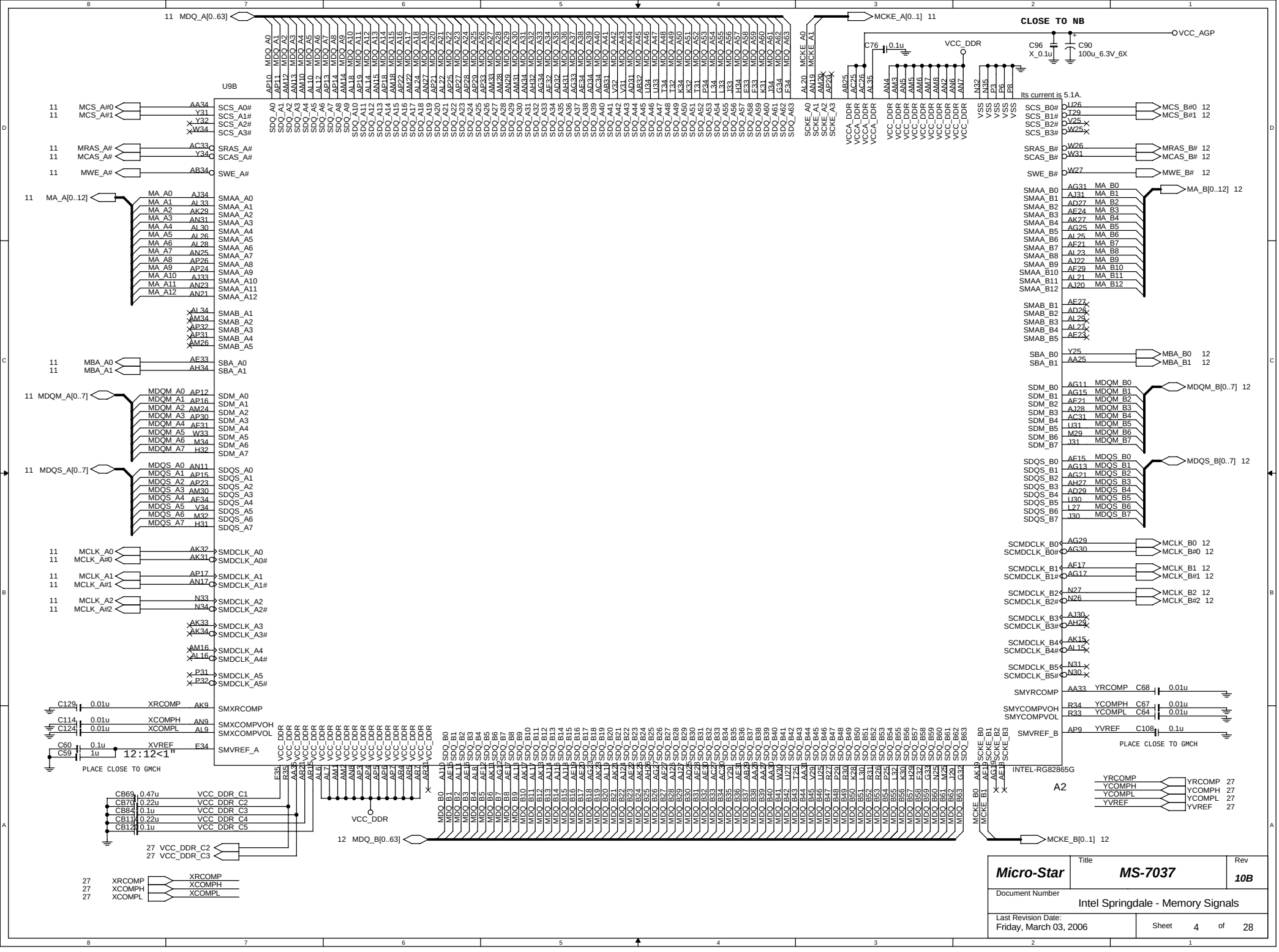
U9B
CLOSE TO NB
VCC_AGP
VCC_DDR
C76 0.1u
C96 X_0.1u
C90 100u_6.3V_6X
Its current is 5.1A.
11 MDQ_A[0..63]
MCKE_A[0..1] 11
MCS_A#0
MCS_A#1
MRAS_A#
MCAS_A#
MWE_A#
MA_A[0..12]
MBA_A0
MBA_A1
MDQM_A[0..7]
MDQS_A[0..7]
MCLK_A0
MCLK_A#0
MCLK_A1
MCLK_A#1
MCLK_A2
MCLK_A#2
C129 0.01u XRCOMP
C114 0.01u XCOMPH
C124 0.01u XCOMPL
C60 0.1u XVREF
C59 1u
12:12<1"
PLACE CLOSE TO GMCH
CB69 0.47u VCC_DDR_C1
CB70 0.22u VCC_DDR_C2
CB84 0.1u VCC_DDR_C3
CB114 0.22u VCC_DDR_C4
CB124 0.1u VCC_DDR_C5
27 VCC_DDR_C2
27 VCC_DDR_C3
27 XRCOMP
27 XCOMPH
27 XCOMPL
VCC_DDR
12 MDQ_B[0..63]
MCS_B#0 12
MCS_B#1 12
MRAS_B# 12
MCAS_B# 12
MWE_B# 12
MA_B[0..12] 12
MBA_B0 12
MBA_B1 12
MDQM_B[0..7] 12
MDQS_B[0..7] 12
MCLK_B0 12
MCLK_B#0 12
MCLK_B1 12
MCLK_B#1 12
MCLK_B2 12
MCLK_B#2 12
C68 0.01u
C67 0.01u
C64 0.01u
C108 0.1u
PLACE CLOSE TO GMCH
INTEL-RG82865G
A2
YRCOMP 27
YCOMPH 27
YCOMPL 27
YVREF 27
MCKE_B[0..1] 12
Micro-Star
Title
MS-7037
Rev
10B
Document Number
Intel Springdale - Memory Signals
Last Revision Date:
Friday, March 03, 2006
Sheet 4 of 28

CPU VOLTAGE BLOCK

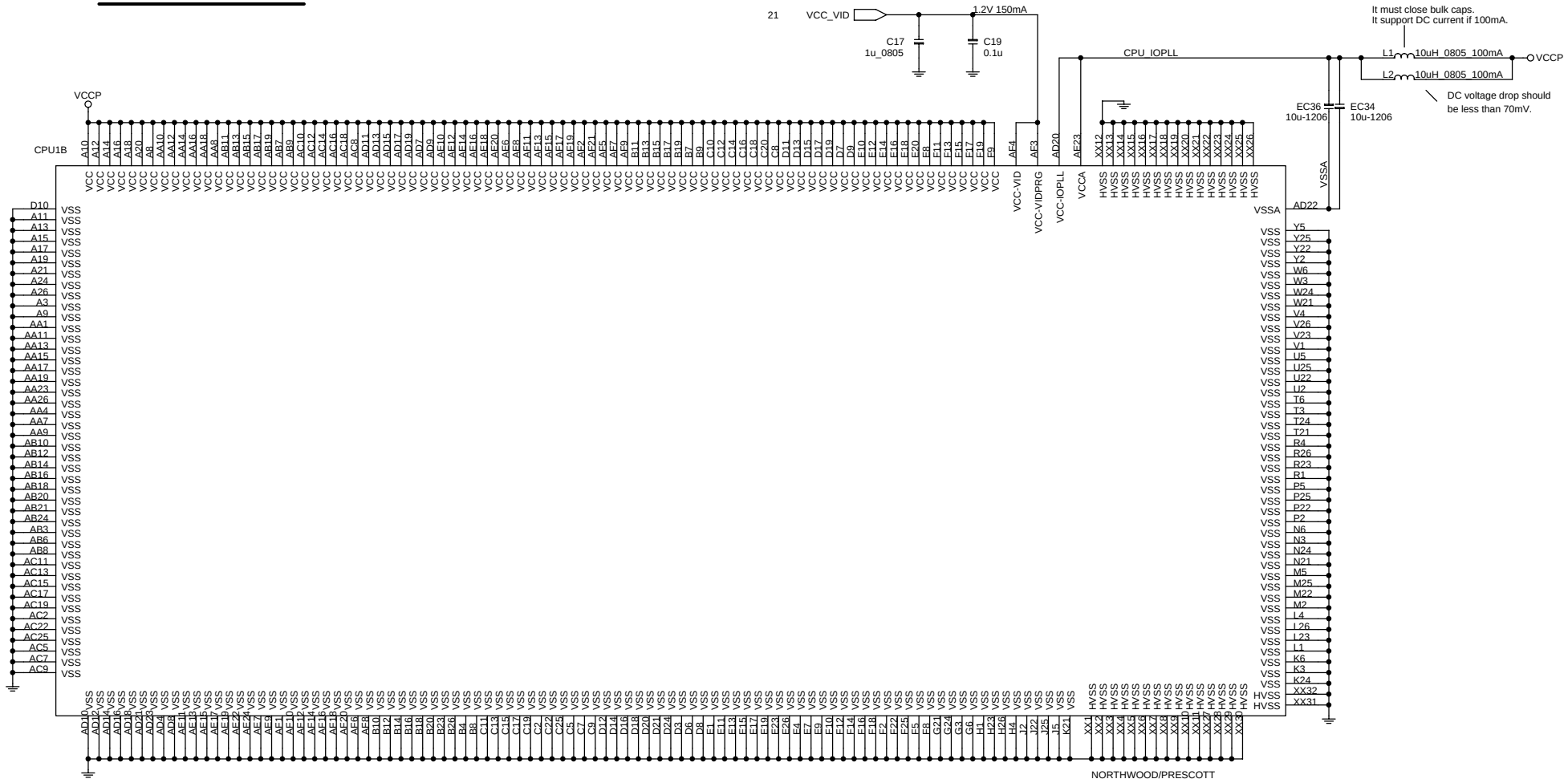

CPU DECOUPLING CAPACITORS

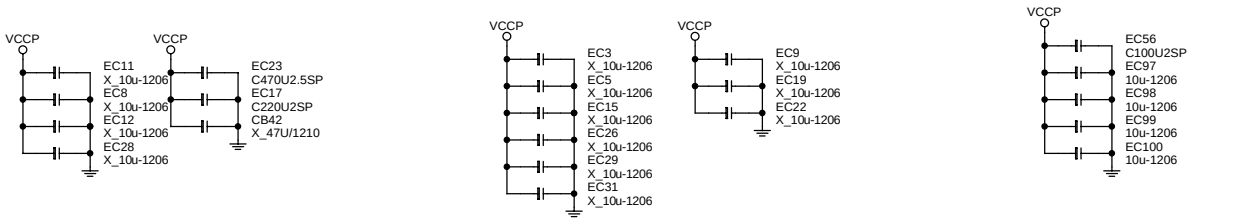

7pcs

Place these caps within socket cavity

9pcs

Place these caps within north side of processor

5pcs

Place these caps within south side of processor

Micro-Star	Title: MS-7037	Rev: 10B
Document Number: Intel mPGA478B - Power		
Last Revision Date: Friday, March 03, 2006	Sheet 4 of 31	

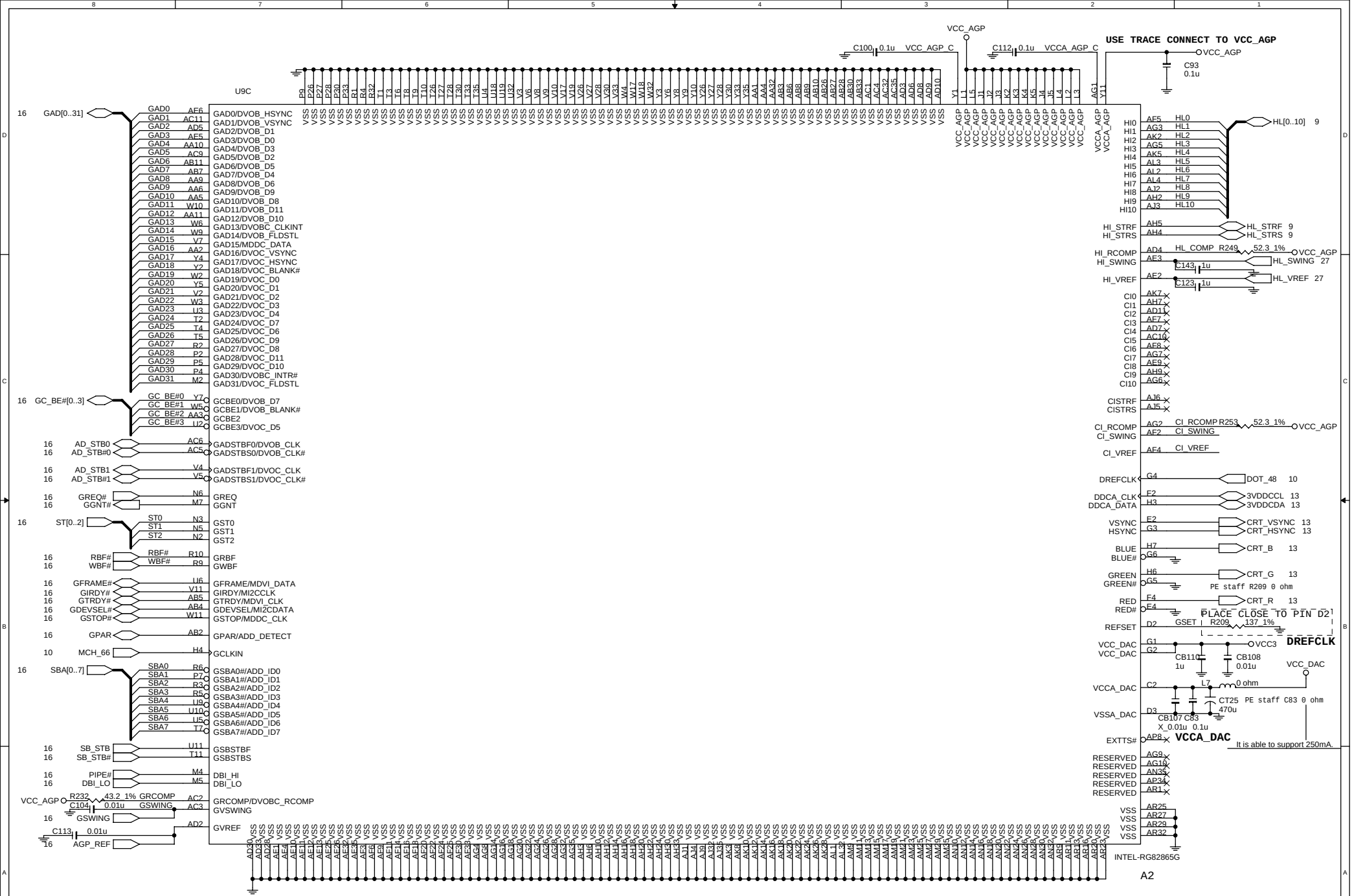

Micro-Star	Title: MS-7037	Rev: 10B
Document Number: Intel Springdale - AGP & HLink & LAN Signals		
Last Revision Date: Friday, March 03, 2006	Sheet 5 of 28	

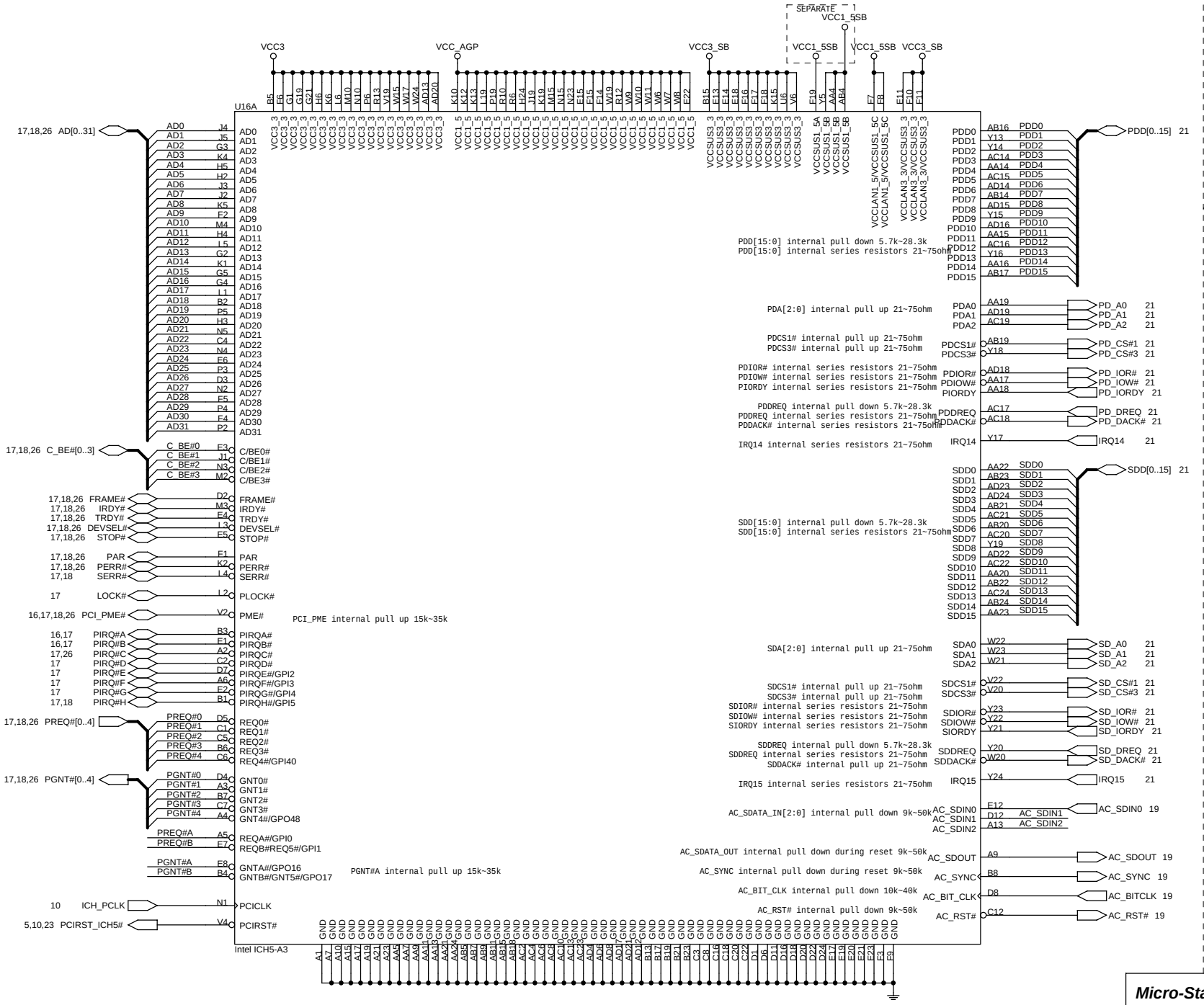

ICH5 Pull-Up / Down Resistors

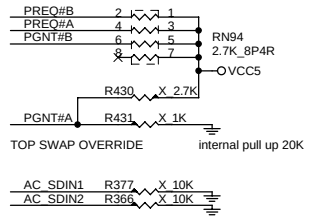

ICH5 Decoupling Capacitors

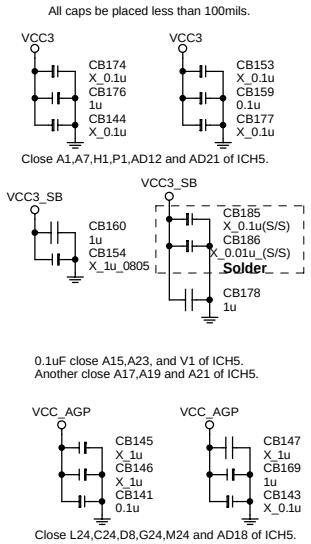

Micro-Star	Title: MS-7037	Rev: 10B
Document Number: Intel ICH5 - PCI & IDE & AC97 Signals		
Last Revision Date: Friday, March 03, 2006	Sheet 6 of 28	

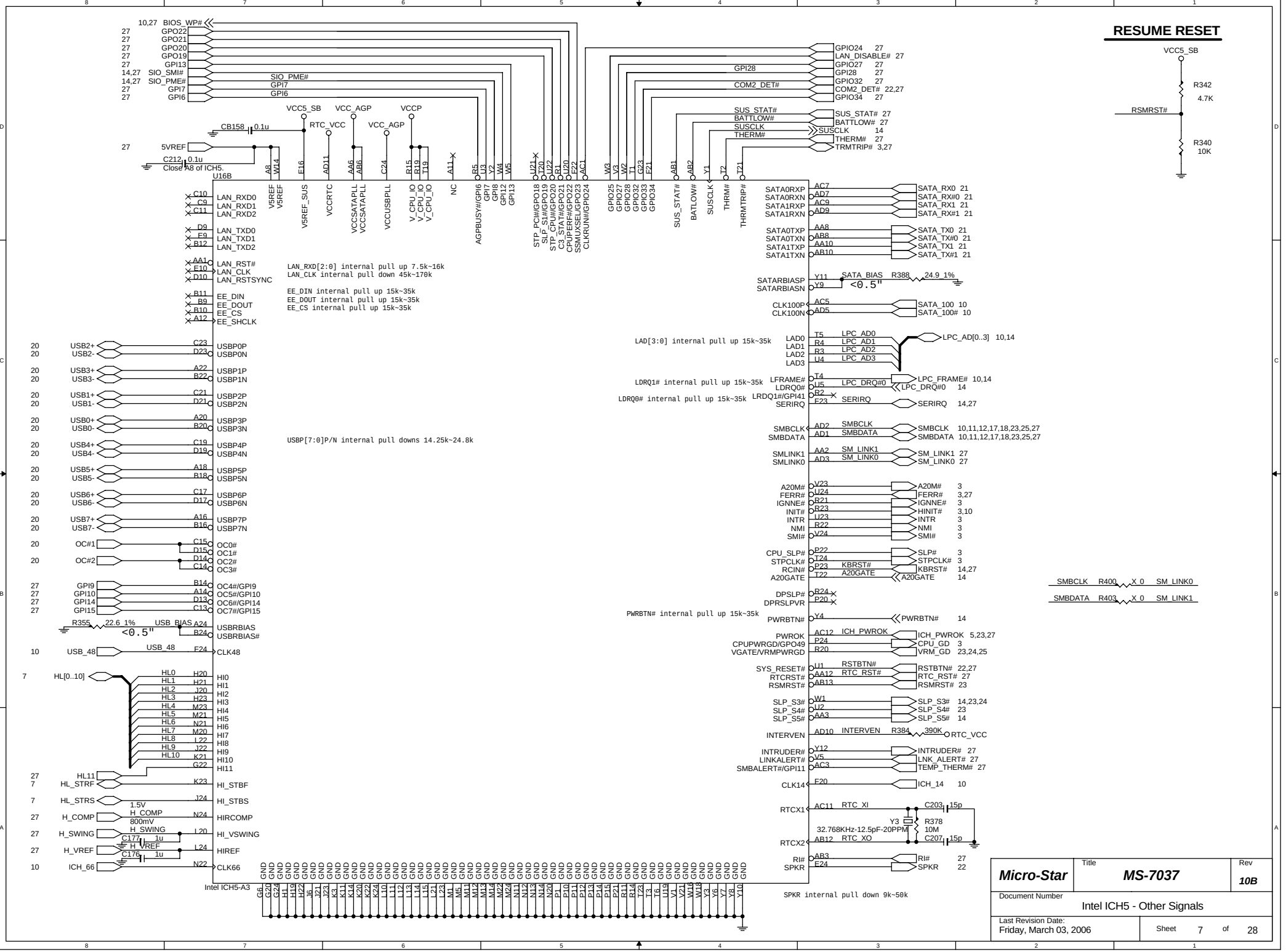
RESUME RESET
VCC5_SB
R342
4.7K
RSMRST#
R340
10K
U16B
Intel ICH5-A3
LAN_RXD[2:0] internal pull up 7.5k~16k
LAN_CLK internal pull down 45k~170k
EE_DIN internal pull up 15k~35k
EE_DOUT internal pull up 15k~35k
EE_CS internal pull up 15k~35k
USBP[7:0]P/N internal pull downs 14.25k~24.8k
LAD[3:0] internal pull up 15k~35k
LDRQ1# internal pull up 15k~35k
LDRQ0# internal pull up 15k~35k
PWRBTN# internal pull up 15k~35k
SPKR internal pull down 9k~50k
32.768KHz-12.5pF-20PPM
Micro-Star
Title
MS-7037
Rev
10B
Document Number
Intel ICH5 - Other Signals
Last Revision Date:
Friday, March 03, 2006
Sheet 7 of 28

CLOCK GENERATOR

	BSEL1	BSEL0
100MHz	0	0
133MHz	0	1
166MHz	1	1

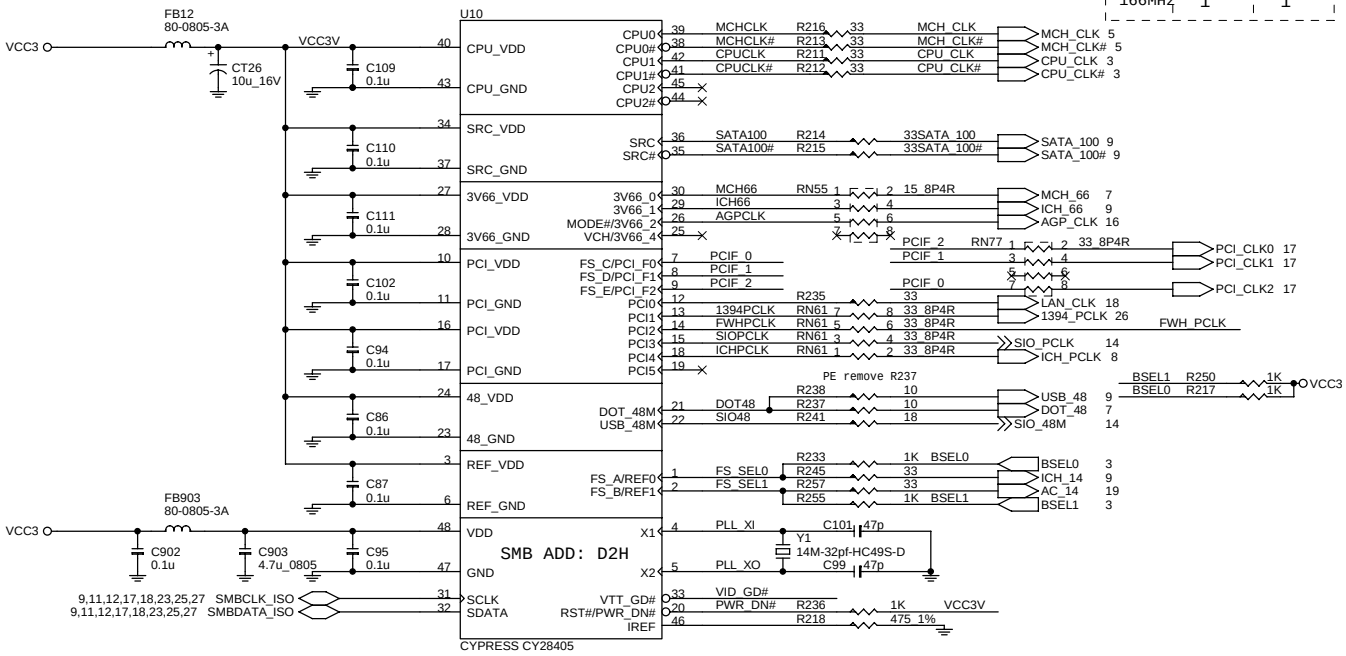

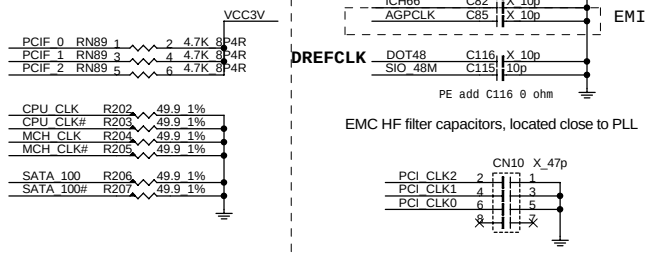

CLOCK GENERATOR VTT POWER DOWN BLOCK

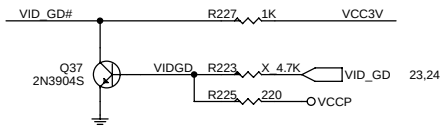

Mounting Holes

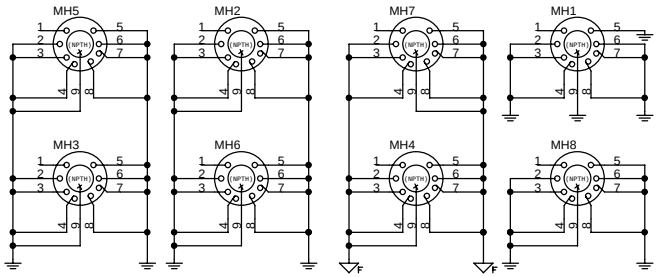

FIRMWARE HUB (FWH)

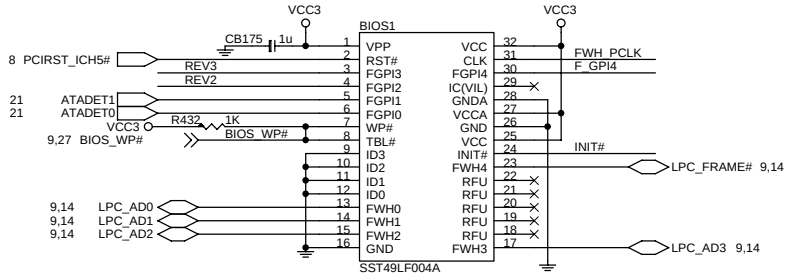

60 階4M

FWH DECOUPLING CAPACITORS

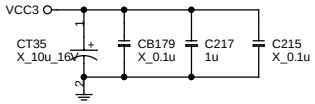

Place Cap. as Close to FWH< 350 mil

Optics Orientation Holes

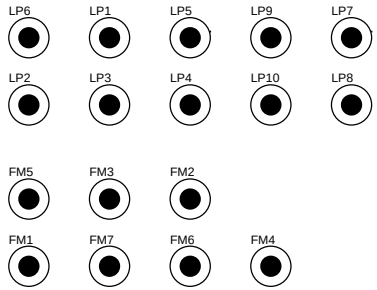

FWH INIT Signal Voltage Translation

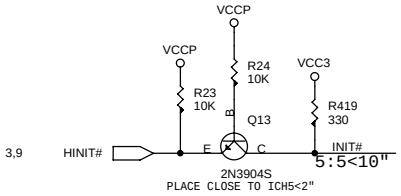

FWH RESISTORS

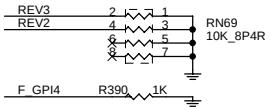

FWH write protect

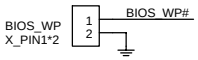

BIOS_WP	BIOS Update
SHORT	Write Disable
OPEN	Write Enable

Simulation

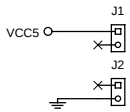

Micro-Star	Title: MS-7037	Rev: 10B
	Document Number: Clock - Cypress CY28405 & BIOS	
	Last Revision Date: Friday, March 03, 2006	Sheet 8 of 28

DDR DIMM1

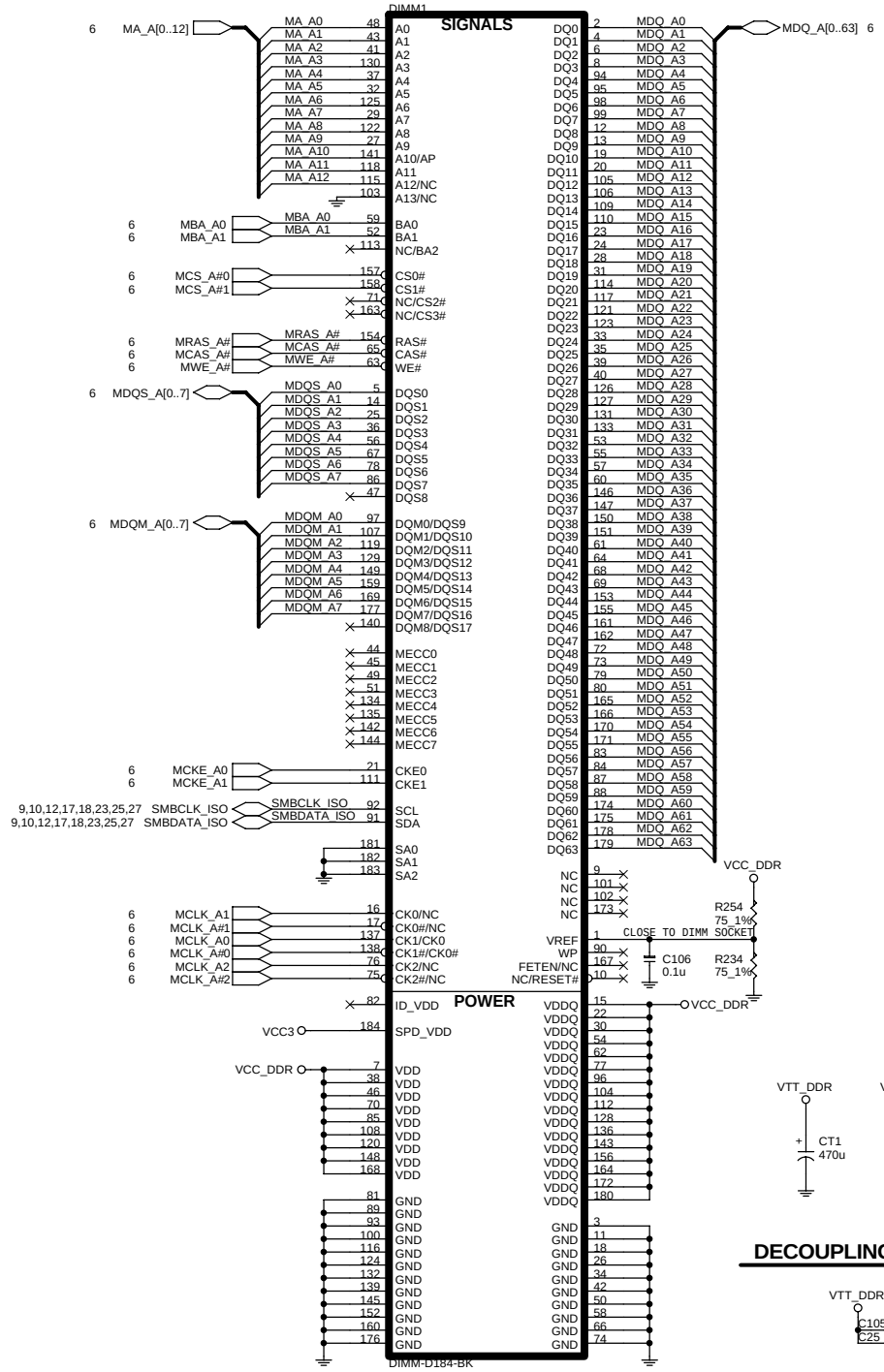

ADDR.=1010000B(A0H)

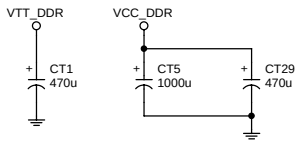

DECOUPLING CAPACITORS

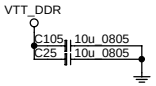

DDR Terminational Resisitors

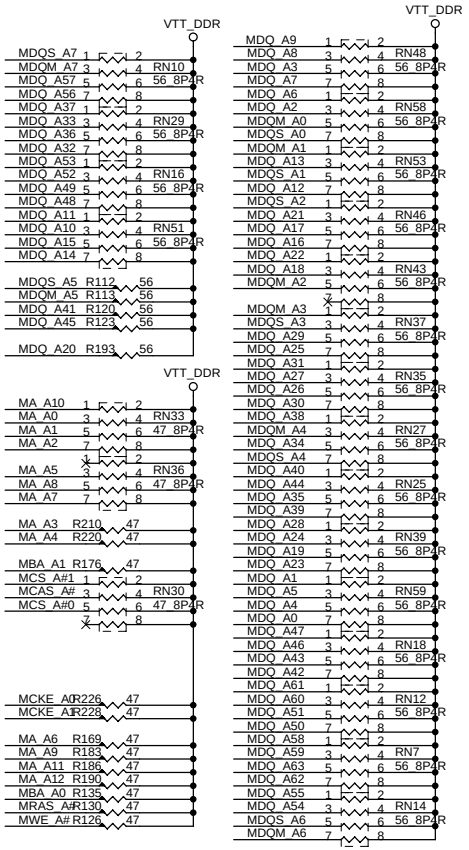

DECOUPLING CAPACITORS

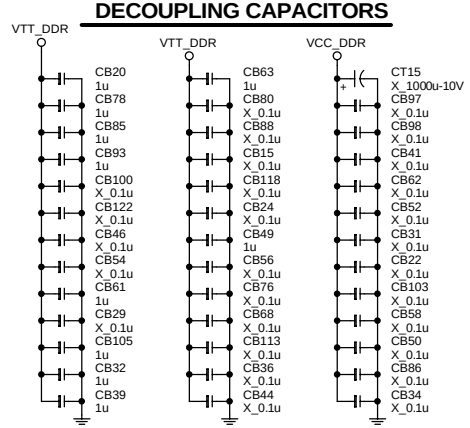

Place these decoupling capacitors close to VTT_DDR termination resistors.
One decoupling capacitor for each R-pack.

Micro-Star	Title: MS-7037	Rev: 10B
Document Number: DDR DIMM 1		
Last Revision Date: Friday, March 03, 2006	Sheet 9 of 28	

DDR DIMM2

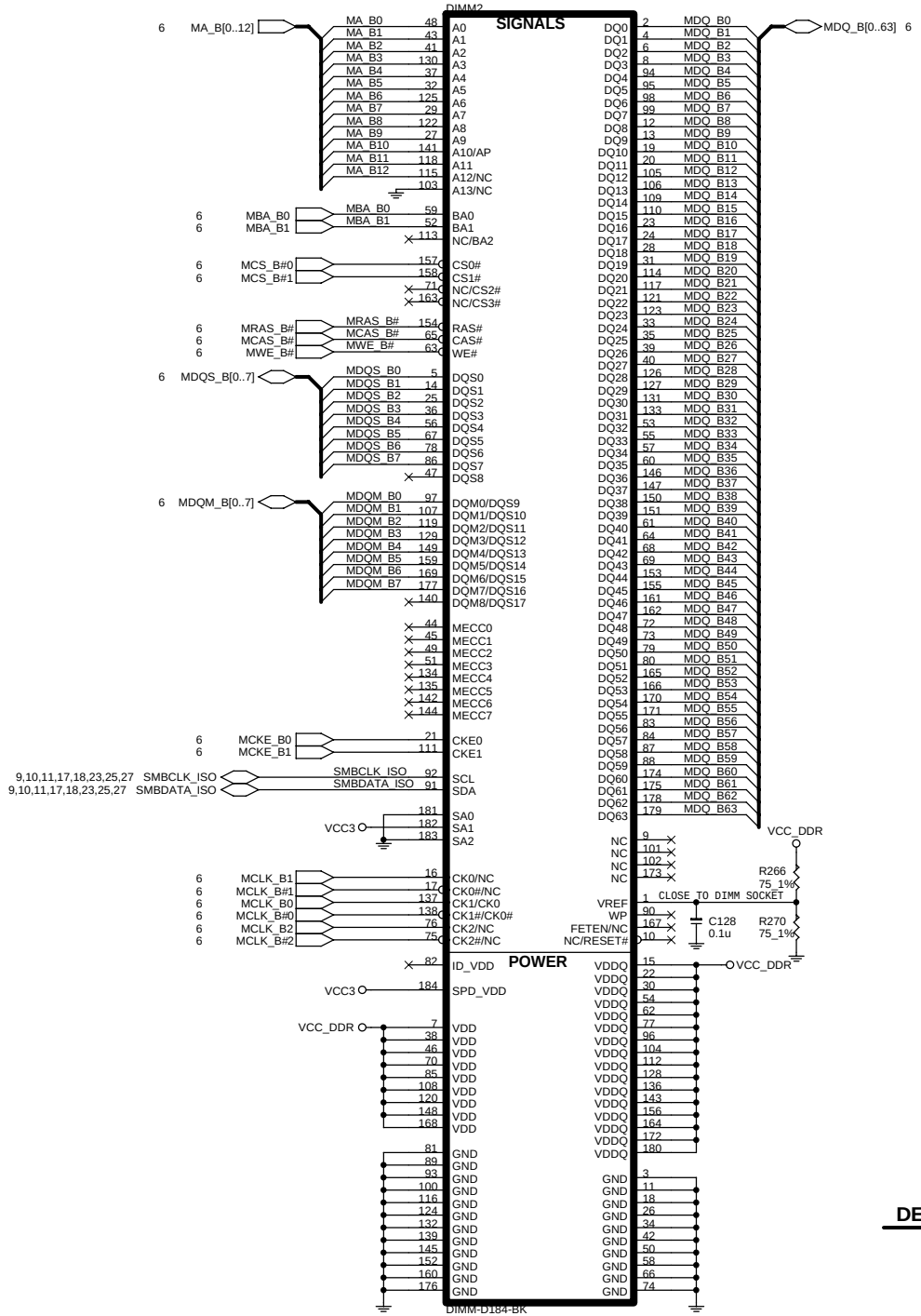

ADDR.=1010010B(A4H)

DDR Terminational Resisitors

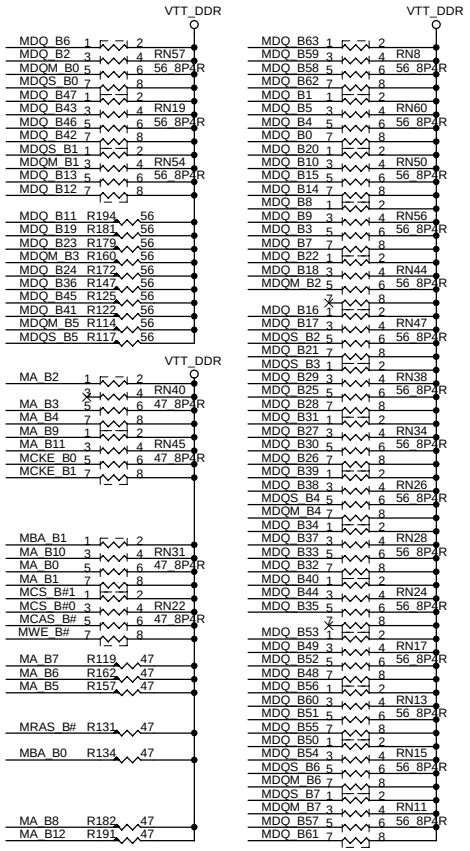

DECOUPLING CAPACITORS

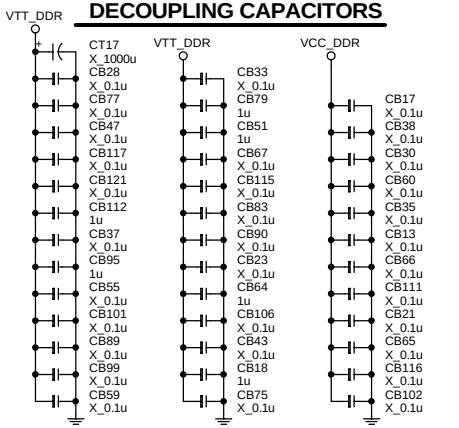

Place these decoupling capacitors close to VTT_DDR termination resistors.
One decoupling capacitor for each R-pack.

DECOUPLING CAPACITORS

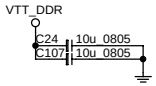

Micro-Star	Title: MS-7037	Rev: 10B
Document Number: DDR DIMM 2		
Last Revision Date: Friday, March 03, 2006	Sheet 10 of 28	

VGA CONNECTOR

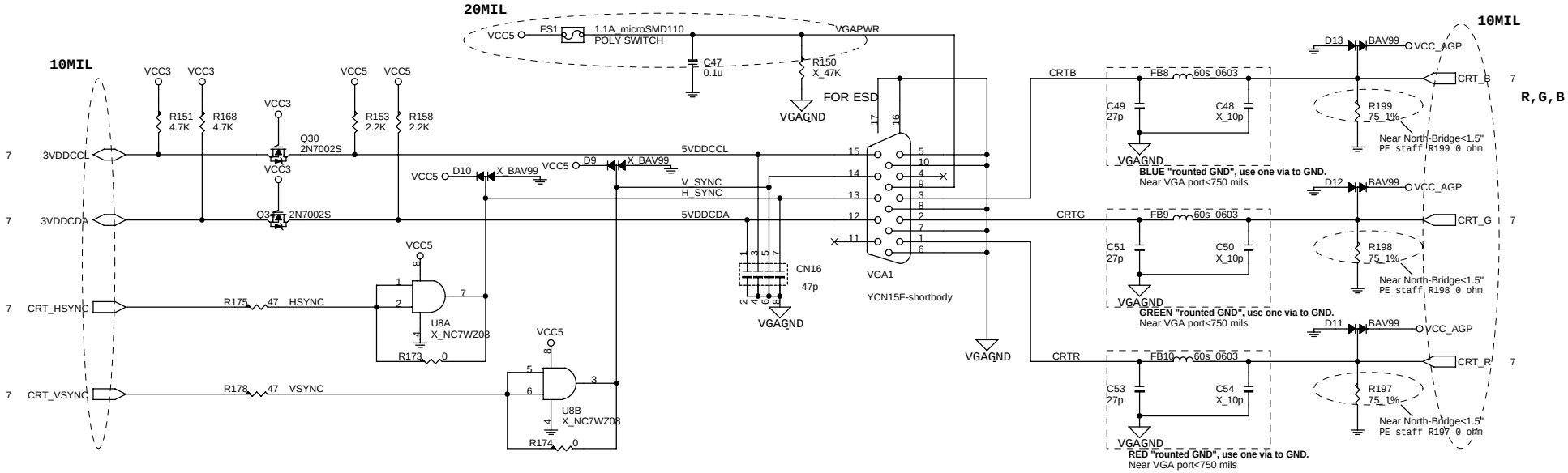

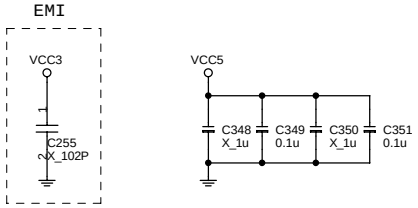

Micro-Star	Title: MS-7037	Rev: 10B
Document Number: VGA CONNECTOR		
Last Revision Date: Friday, March 03, 2006	Sheet 11 of 28	

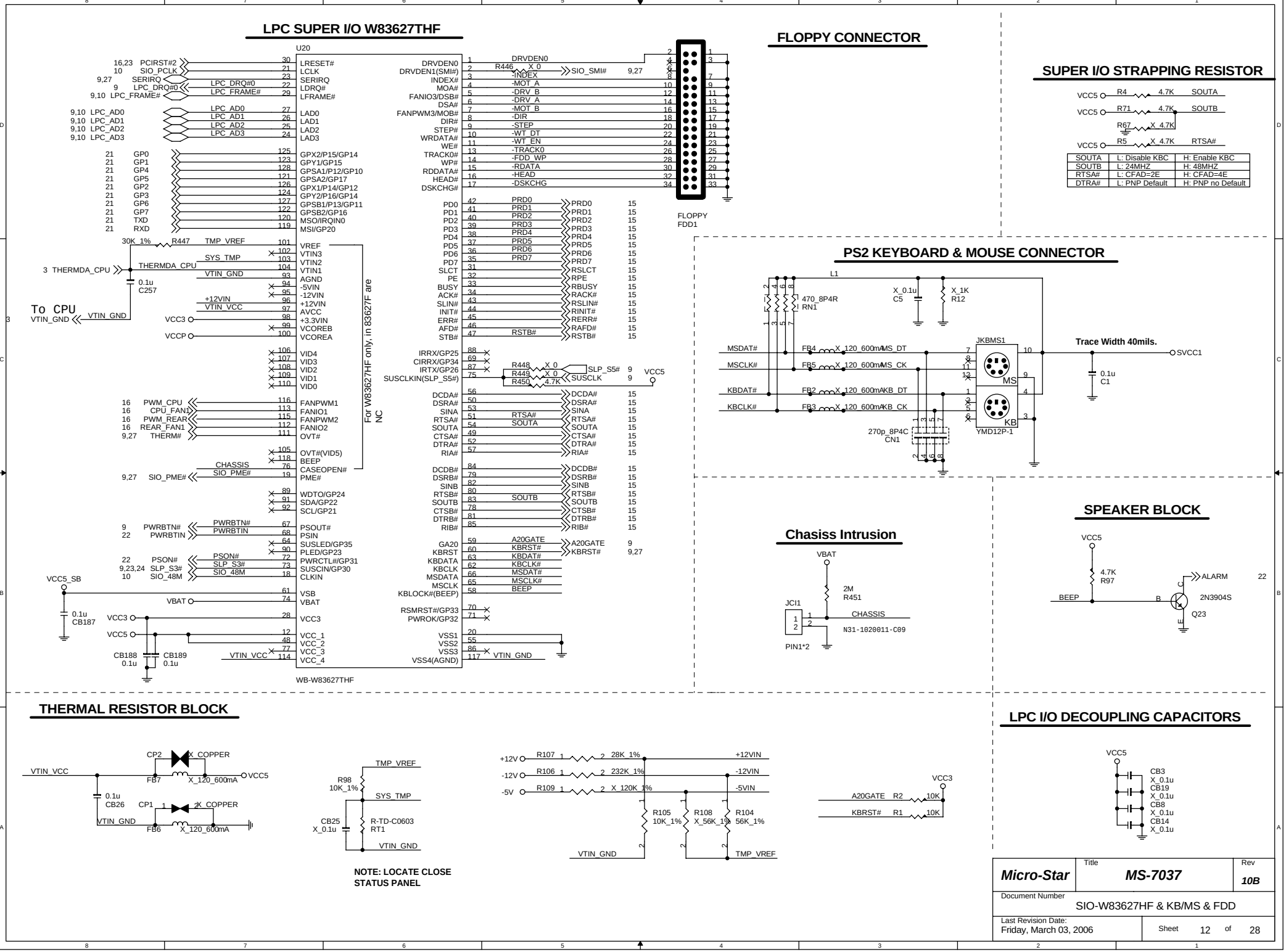
LPC SUPER I/O W83627THF
U20
WB-W83627THF
For W83627HF only, in 83627F are NC
To CPU
FLOPPY CONNECTOR
FLOPPY
FDD1
SUPER I/O STRAPPING RESISTOR
VCC5 R4 4.7K SOUTA
VCC5 R71 4.7K SOUTB
R67 X_4.7K
VCC5 R5 X_4.7K RTSA#
SOUTA L: Disable KBC H: Enable KBC
SOUTB L: 24MHZ H: 48MHZ
RTSA# L: CFAD=2E H: CFAD=4E
DTRA# L: PNP Default H: PNP no Default
PS2 KEYBOARD & MOUSE CONNECTOR
L1
470_8P4R
RN1
X_0.1u
C5
X_1K
R12
JKBMS1
MS
KB
YMD12P-1
Trace Width 40mils.
SVCC1
0.1u
C1
270p_8P4C
CN1
MSDAT# FB4 X_120_600mA MS_DT
MSCLK# FB5 X_120_600mA MS_CK
KBDAT# FB2 X_120_600mA KB_DT
KBCLK# FB3 X_120_600mA KB_CK
Chasiss Intrusion
VBAT
2M
R451
JCI1
CHASSIS
N31-1020011-C09
PIN1*2
SPEAKER BLOCK
VCC5
4.7K
R97
BEEP
ALARM
2N3904S
Q23
THERMAL RESISTOR BLOCK
CP2 X_COPPER
VTIN_VCC
FB7 X_120_600mA
VCC5
0.1u
CB26
CP1 X_COPPER
VTIN_GND
FB6 X_120_600mA
TMP_VREF
R98
10K_1%
SYS_TMP
CB25
X_0.1u
R-TD-C0603
RT1
VTIN_GND
NOTE: LOCATE CLOSE
STATUS PANEL
+12V R107 28K_1% +12VIN
-12V R106 232K_1% -12VIN
-5V R109 X_120K_1% -5VIN
R105
10K_1%
R108
X_56K_1%
R104
56K_1%
VTIN_GND
TMP_VREF
VCC3
A20GATE R2 10K
KBRST# R1 10K
LPC I/O DECOUPLING CAPACITORS
VCC5
CB3
X_0.1u
CB19
X_0.1u
CB8
X_0.1u
CB14
X_0.1u
Micro-Star
Title
MS-7037
Rev
10B
Document Number
SIO-W83627HF & KB/MS & FDD
Last Revision Date:
Friday, March 03, 2006
Sheet 12 of 28

SERIAL PORT 1

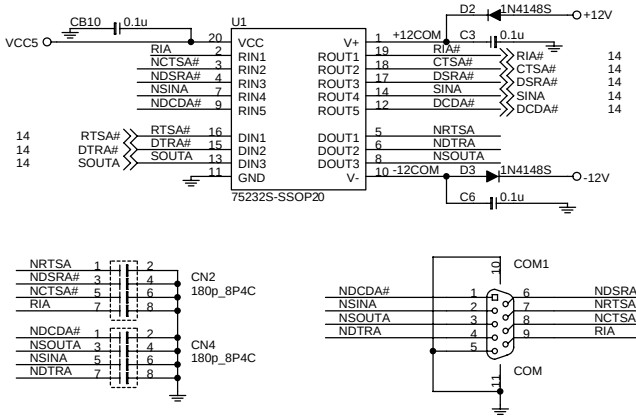

SERIAL PORT 2

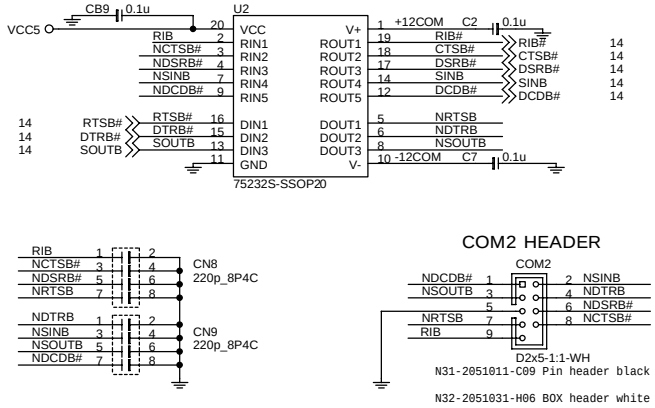

PARALLAL PORT

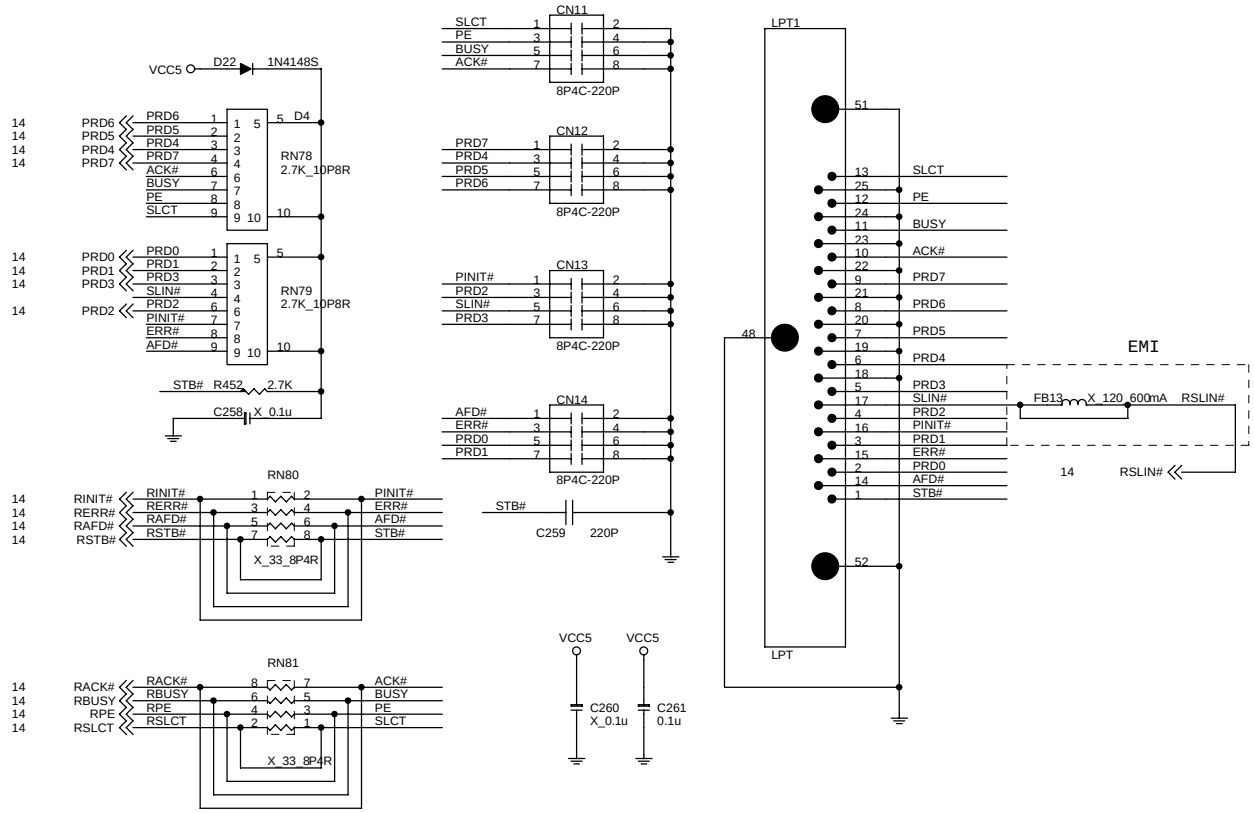

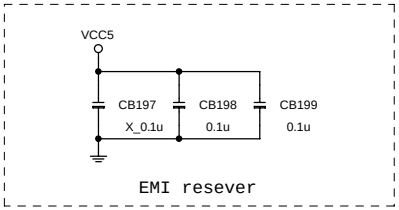

Micro-Star	Title: MS-7037	Rev: 10B
Document Number: COM,LPT		
Last Revision Date: Friday, March 03, 2006	Sheet 13 of 28	

AGP 1.5V 1X/2X/4X/8X SLOT(AGP VER:3.0)

VCC5 = 60mils trace / 15 mils space

CHECK PART NUMBER

AGP Slot Imax

VCCg	8.0A
VCC3	6.0A
VCC12	1.0A
VCC5	2.0A
VCC3_SB	0.75A

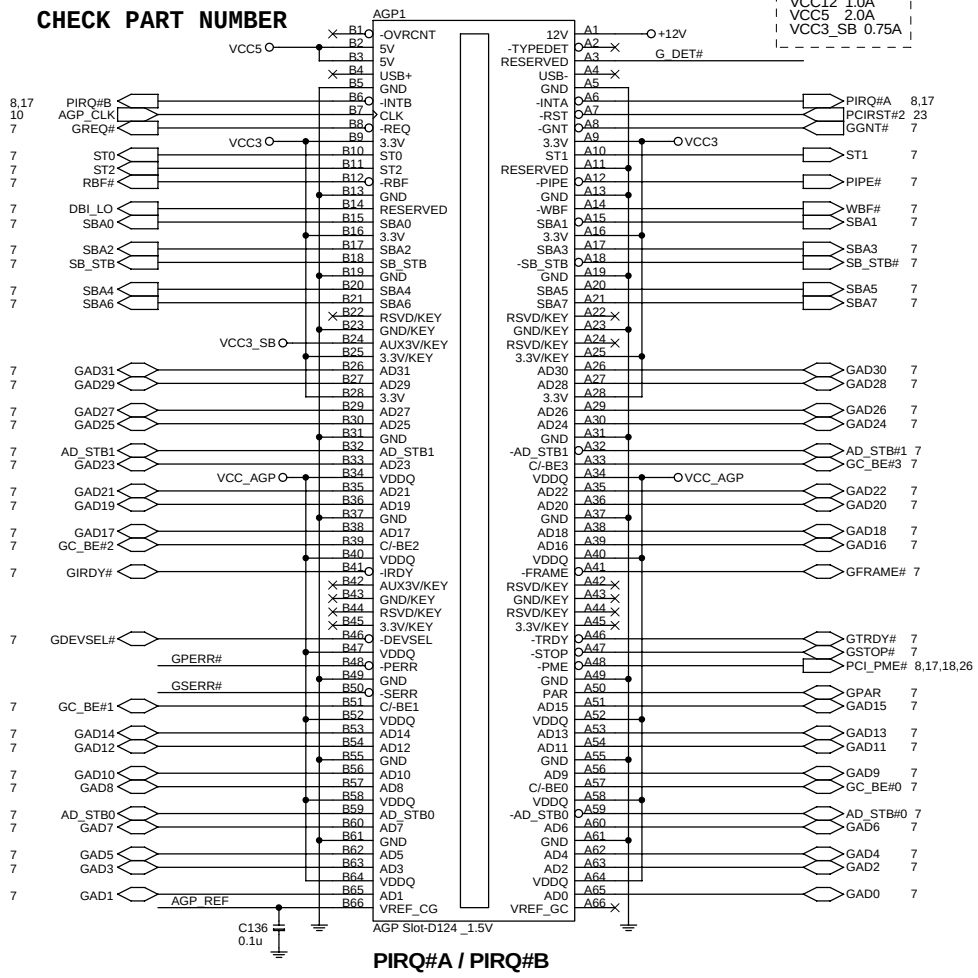

PIRQ#A / PIRQ#B

CPU FAN

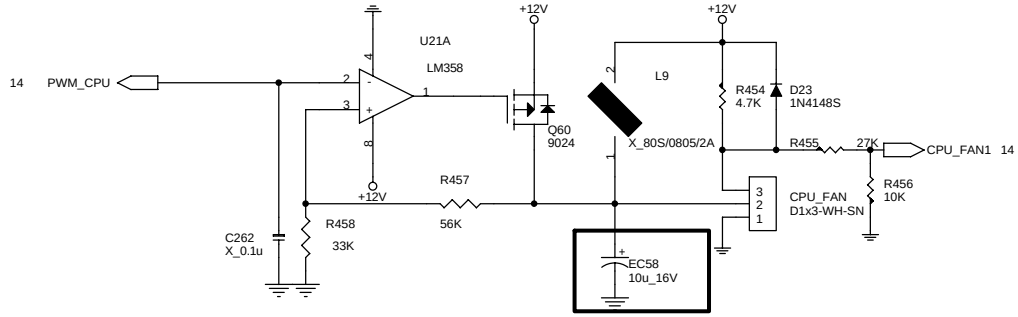

SYSTEM FAN

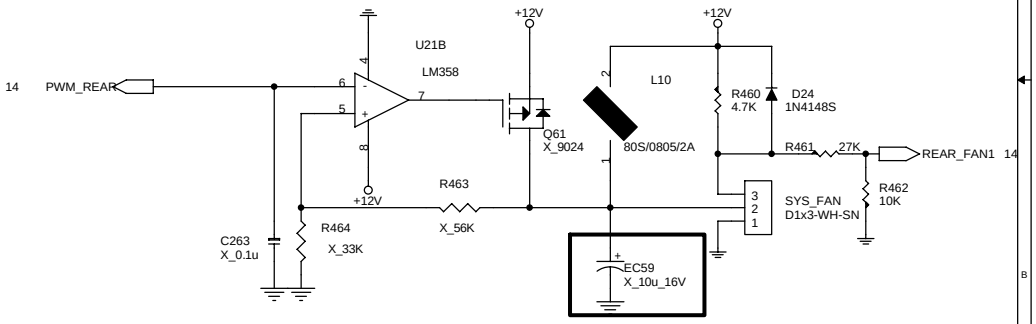

Springdale Reference & Swing Voltage Circuit

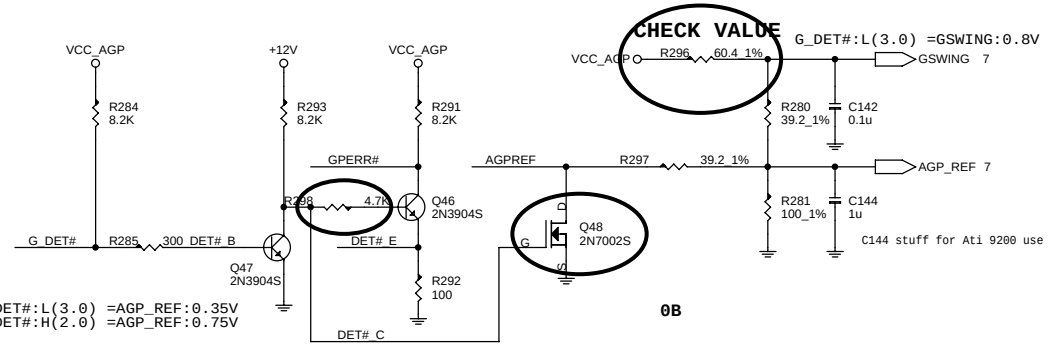

AGP TERMINATION RESISTORS

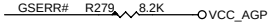

LESS 10MILS STUB TRACE LENGTH MUST BE FOLLOWING.

Place these resistors between PCI and AGP slot

```
echo@mach     G_DET#:L(3.0)  Q48 turn on and AGPREF=0V
AGP_REF=0.35V
=VCC_AGP*(R281//R297)/[(R281//R297)+R280+R296]
so as the GSWING
G_DET#:H(2.0)  Q48 turn off
AGP_REF=0.75V=VCC_AGP*[R281/(R296+R280+R2810]
```

AGP SLOT DECOUPLING CAPACITORS

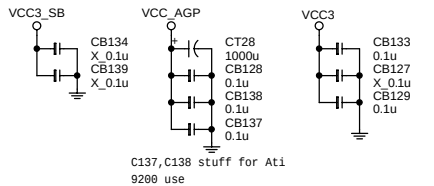

Micro-Star	Title **MS-7037**	Rev **10B**
Document Number	AGP SLOT & FAN CONTROL	
Last Revision Date: Friday, March 03, 2006	Sheet 14 of 28	

PCI SLOT 1 (PCI VER: 2.2 COMPLY)

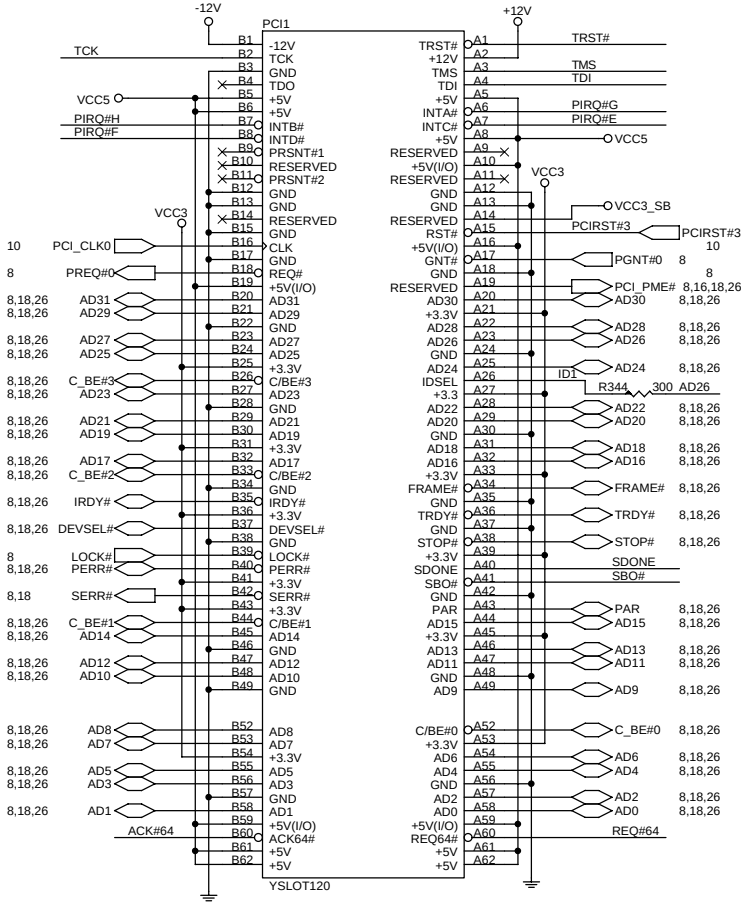

IDSEL = AD26
MASTER = PREQ#0
PIRQ#G

PCI SLOT 2 (PCI VER: 2.2 COMPLY)

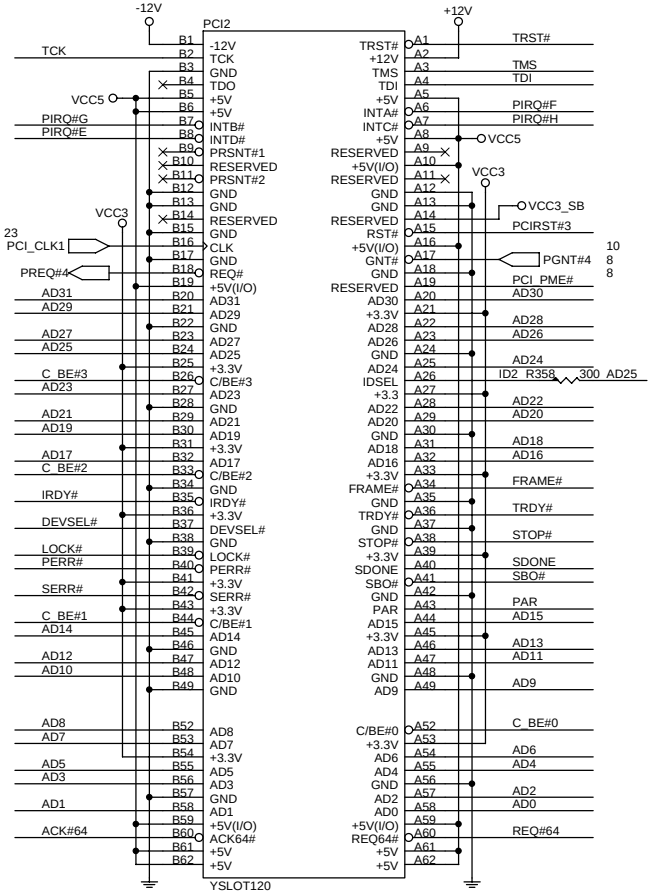

IDSEL = AD25
MASTER = PREQ#4
PIRQ#F

PCI SLOT 3 (PCI VER: 2.2 COMPLY)

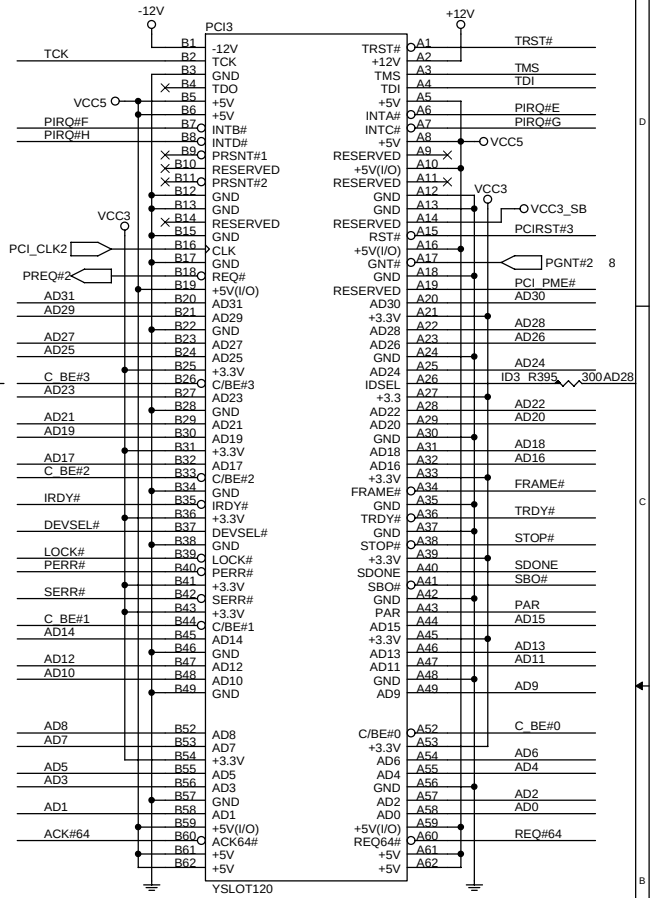

IDSEL = AD28
MASTER = PREQ#2
PIRQ#E

PCI PULL-UP / DOWN RESISTORS

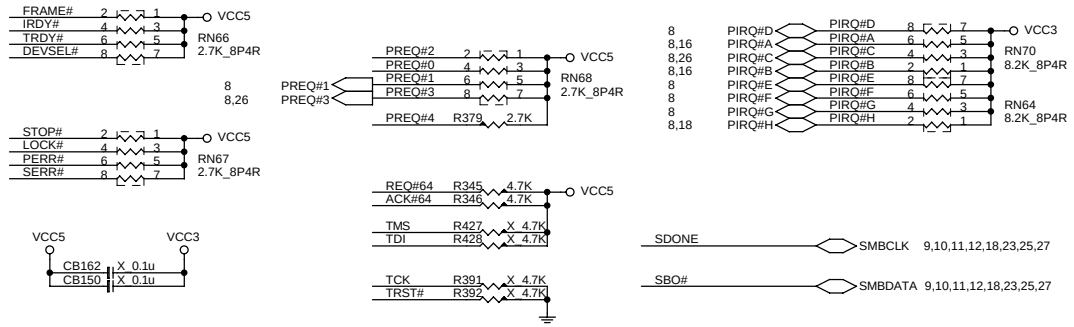

PCI SLOT DECOUPLING CAPACITORS

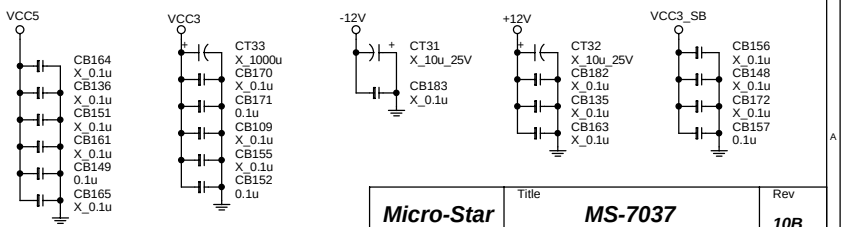

Micro-Star	Title: MS-7037	Rev: 10B
Document Number: PCI 1& 2 & 3 Slots		
Last Revision Date: Friday, March 03, 2006	Sheet 15 of 28	

PCI LAN RTL8110S/8100C

R287 2.49K for 8110S; 5.6k for 8100C

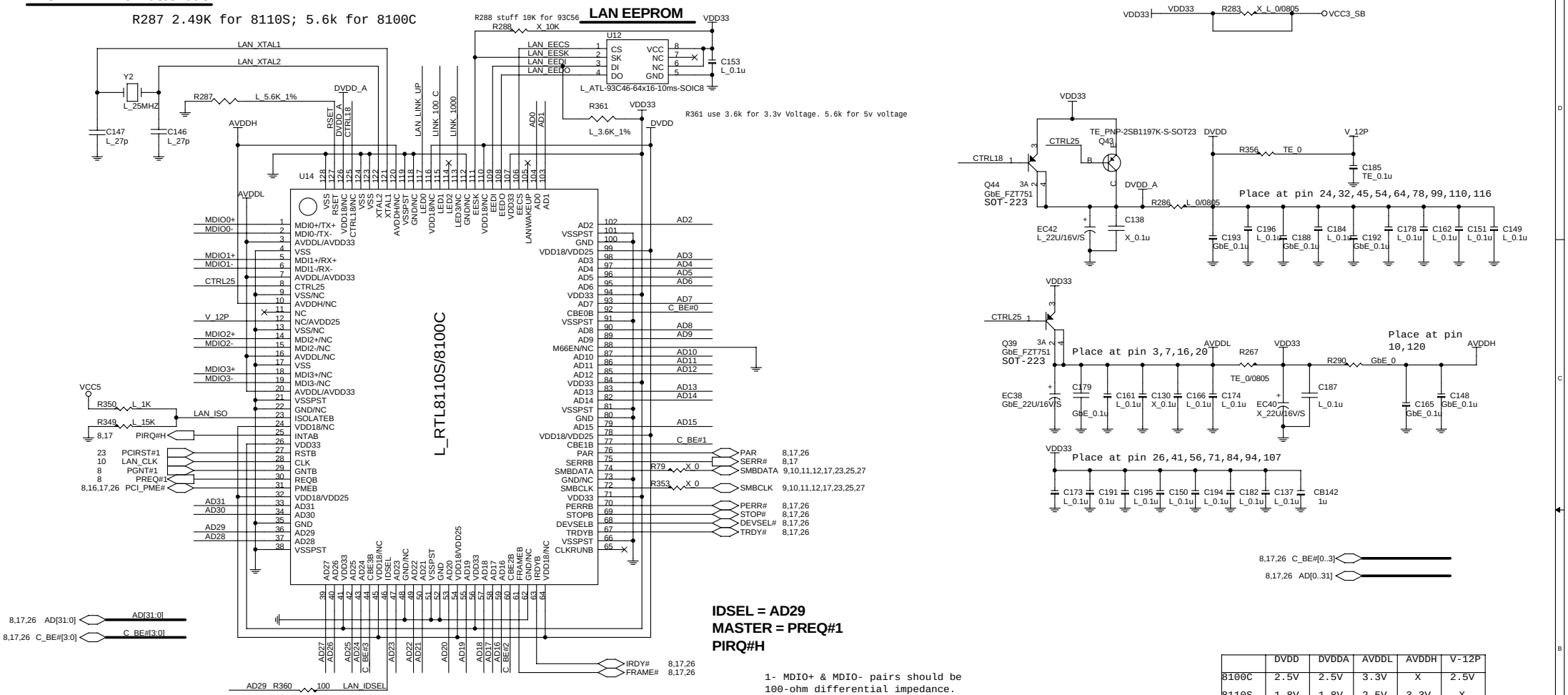

IDSEL = AD29
MASTER = PREQ#1
PIRQ#H

1- MDIO+ & MDIO- pairs should be 100-ohm differential impedance. Route equal length and symmetrically. Separate every pairs.

	DVDD	DVDDA	AVDDL	AVDDH	V-12P
8100C	2.5V	2.5V	3.3V	X	2.5V
8110S	1.8V	1.8V	2.5V	3.3V	X

RJ45 Connector (with transformer)

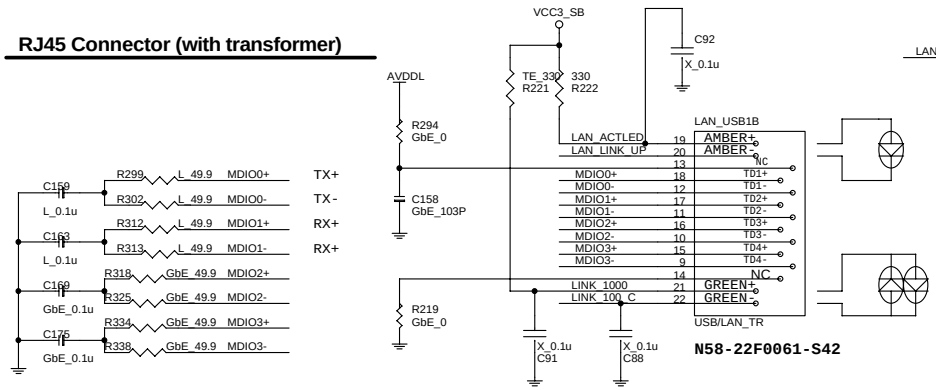

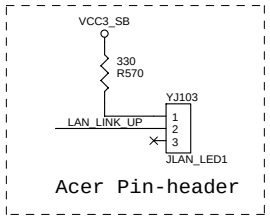

Part Value Selection:
GbE: 8110S LAN(1000M)
TE: 8100C LAN(10/100M)
L: With LAN option
X: No Stuff

Micro-Star	Title: MS-7037	Rev: 10B
Document Number: LAN RTL8110S/8100C		
Last Revision Date: Friday, March 03, 2006	Sheet 16 of 28	

ALC655 AC97 CODEC

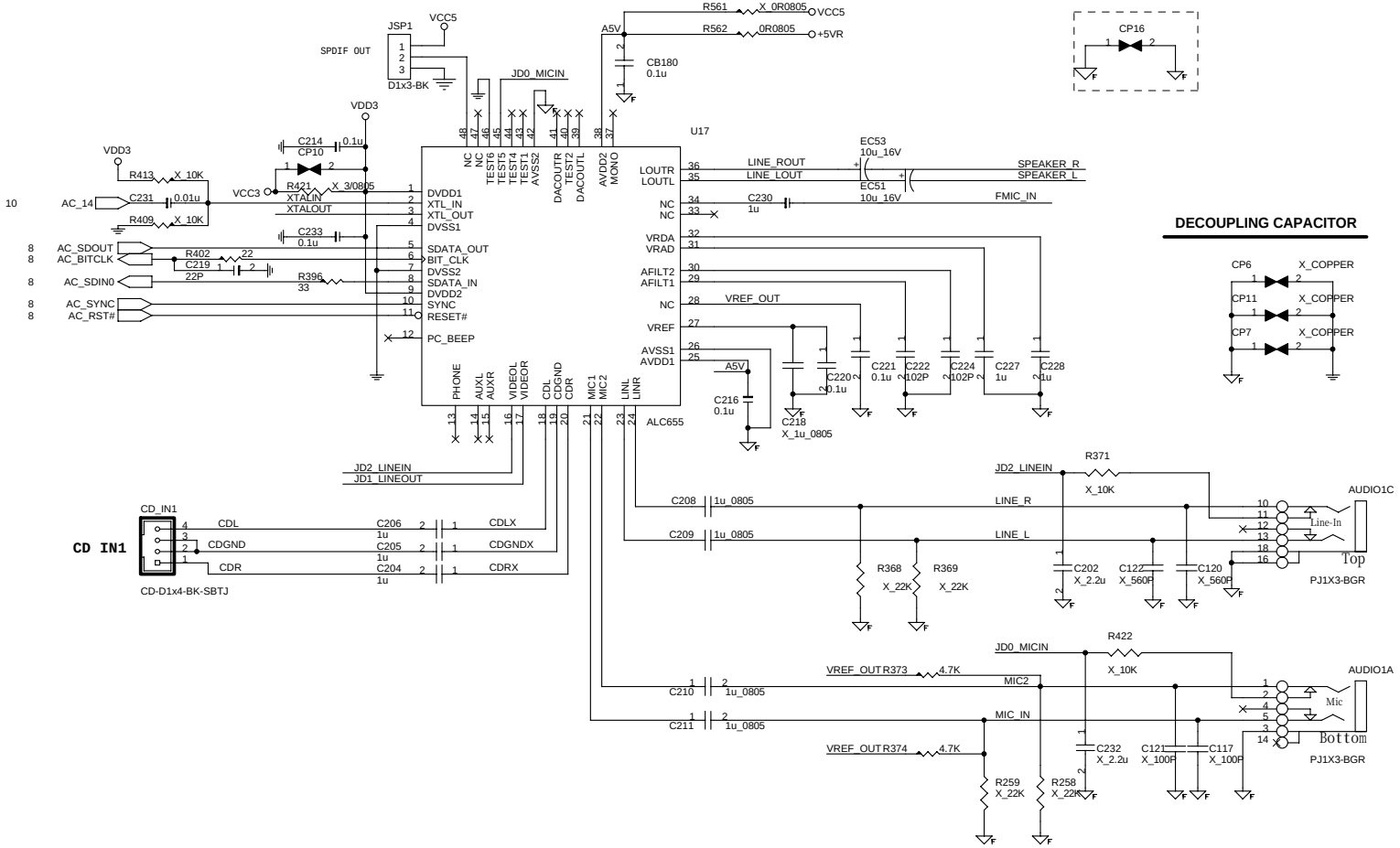

DECOUPLING CAPACITOR

AUDIO CODE REGULATORS

Trace Width 30mils.

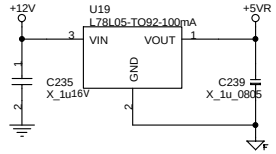

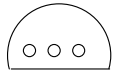

1 2 3
O G I
TOP VIEW

Internal Speaker

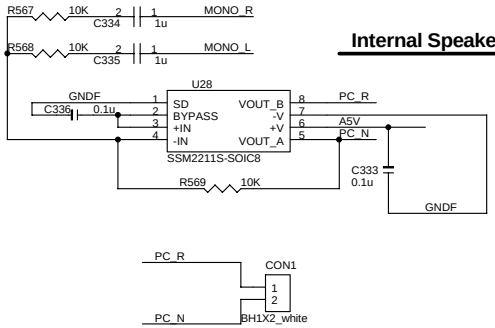

Channel Barebone Internal Speaker amplifier

Intel Front Audio Connector

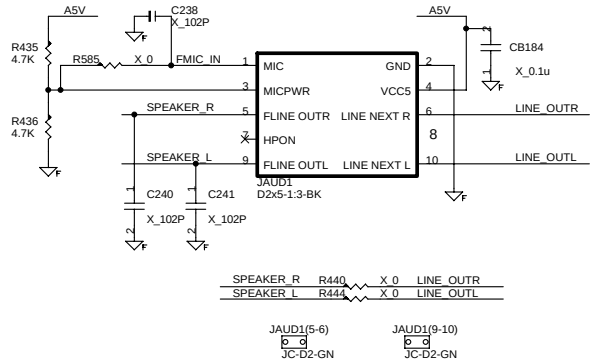

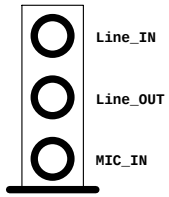

N54-13F0031-A10

SPEAKER OUT JACK

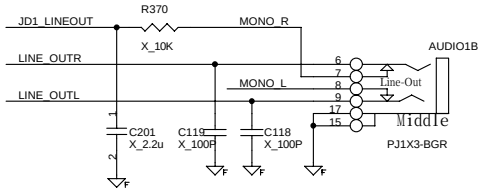

AUDIO CODE CRYSTAL CIRCUIT

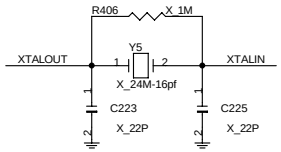

Micro-Star	Title: MS-7037	Rev: 10B
Document Number: ALC655		
Last Revision Date: Friday, March 03, 2006	Sheet 17 of 28	

POWER CIRCUIT FOR USB PORT 0,1,2,3

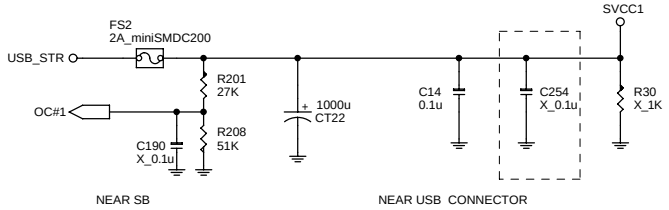

POWER CIRCUIT FOR USB PORT 4,5,6,7

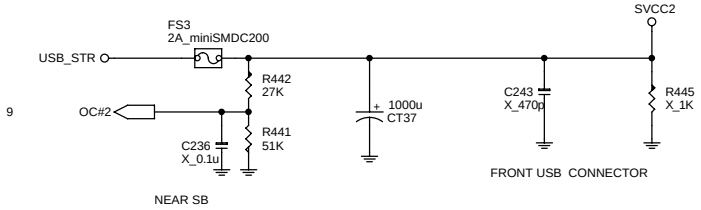

REAR PANEL USB CONNECTOR FOR USB PORT 0,1

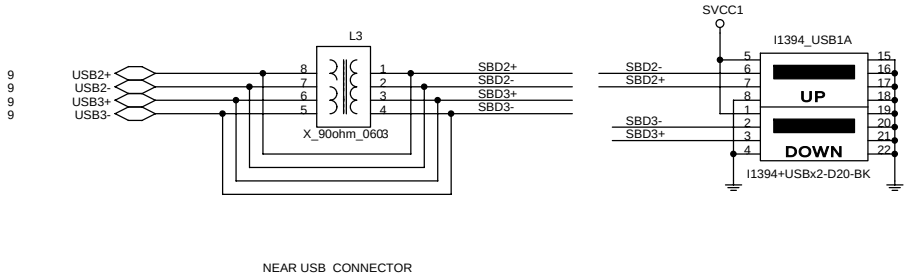

FRONT PANEL USB CONNECTOR FOR USB PORT 4,5

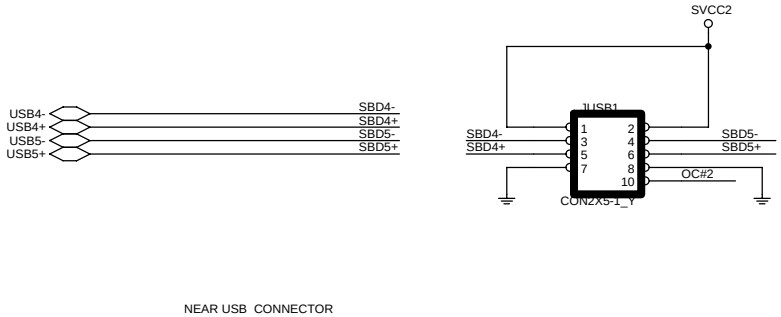

REAR PANEL USB CONNECTOR FOR USB PORT 2,3

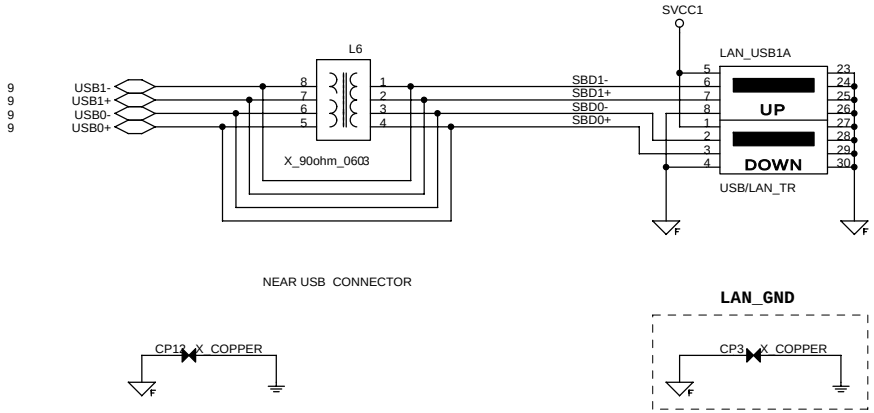

FRONT PANEL USB CONNECTOR FOR USB PORT 6,7

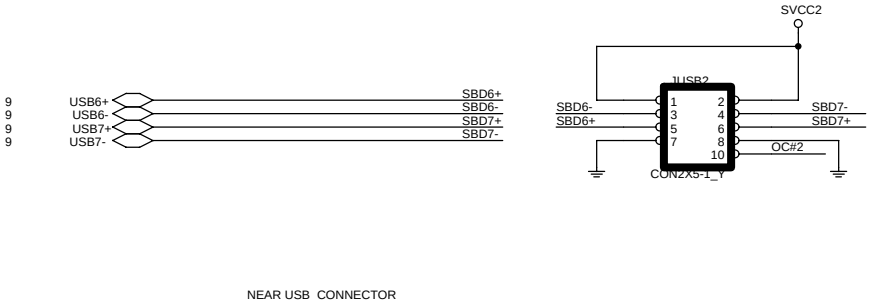

Micro-Star	Title: MS-7037	Rev: 10B
Document Number: USB Connectors		
Last Revision Date: Friday, March 03, 2006	Sheet 18 of 28	

PRIMARY IDE BLOCK

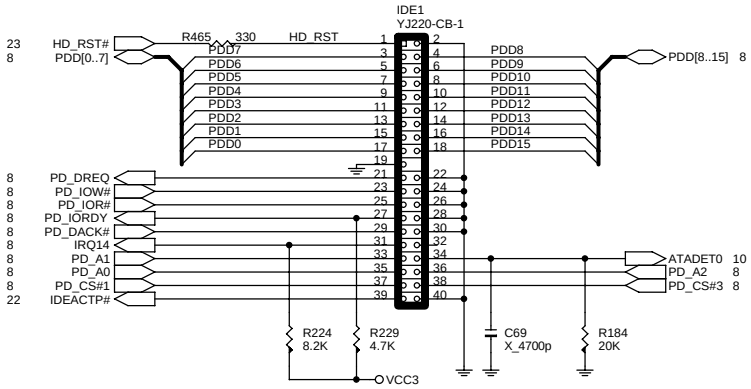

SECONDARY IDE BLOCK

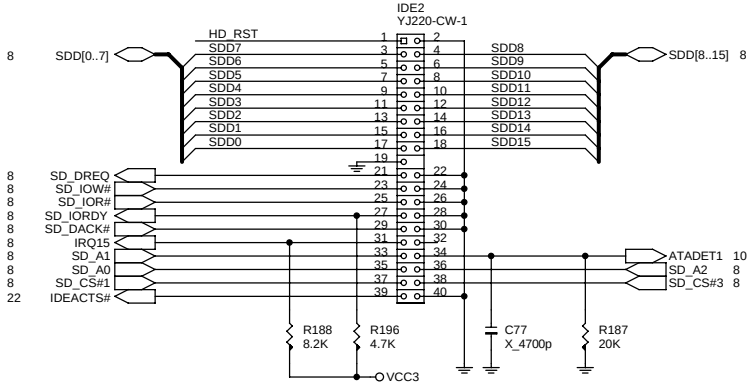

Game port

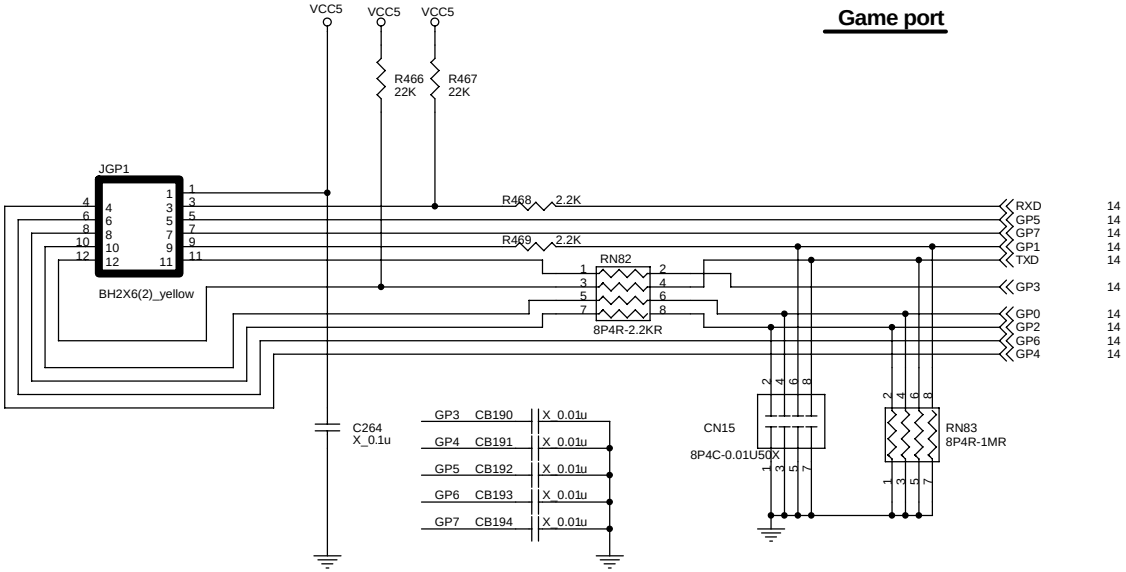

SERIAL ATA CONNECTOR BLOCK

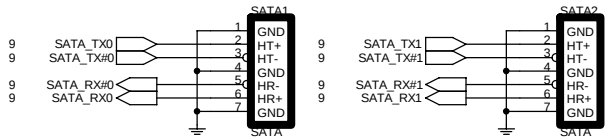

20:5:7:5:20<5"

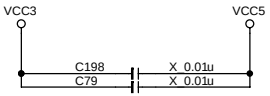

Micro-Star	Title: MS-7037	Rev: 10B
Document Number: IDE & SATA & Game port		
Last Revision Date: Friday, March 03, 2006	Sheet 19 of 28	

ATX CONNECTOR

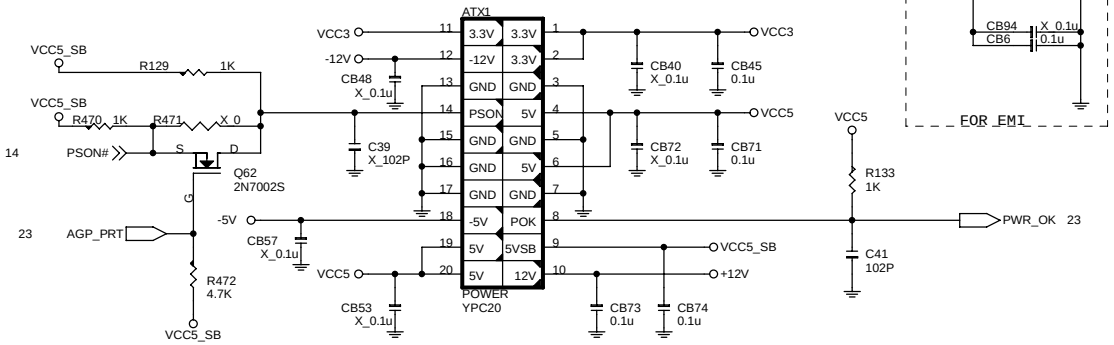

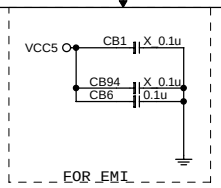

BUZZER

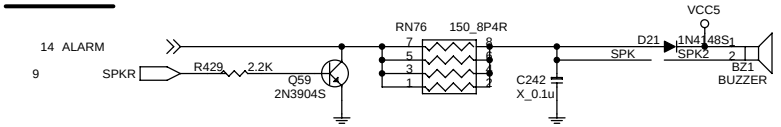

Intel Front Panel

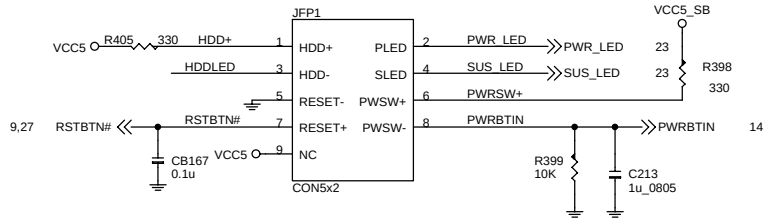

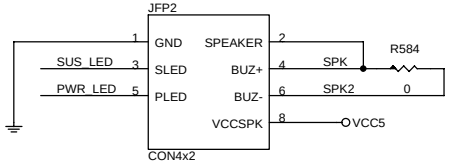

IDE LED

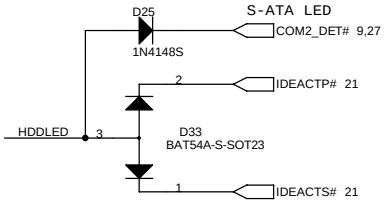

Micro-Star	Title MS-7037	Rev 10B
Document Number	ATX, FRONT PANEL	
Last Revision Date: Friday, March 03, 2006	Sheet 20 of 28	

ACPI Controller

ICH5 300mA
PCI 375+20+20= 415mA

VCC3_SB 715mA

1.7V@250mA

Power	S0	S3	S5
VCC3_SB	Main	Standby	Standby
VCC5_STR	Main	Standby	0V
MEM_STR	Main	Standby	0V

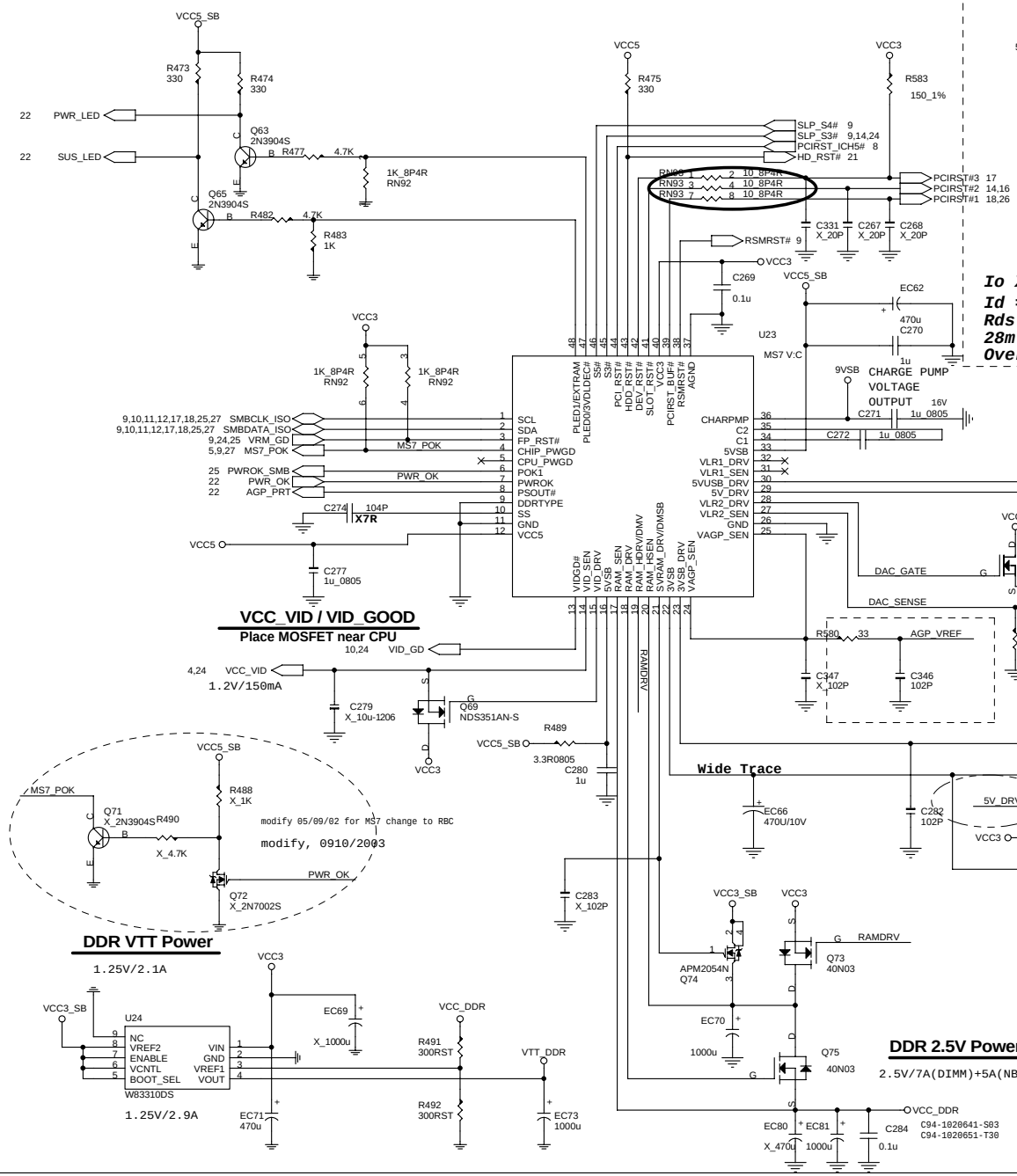

AGP POWER

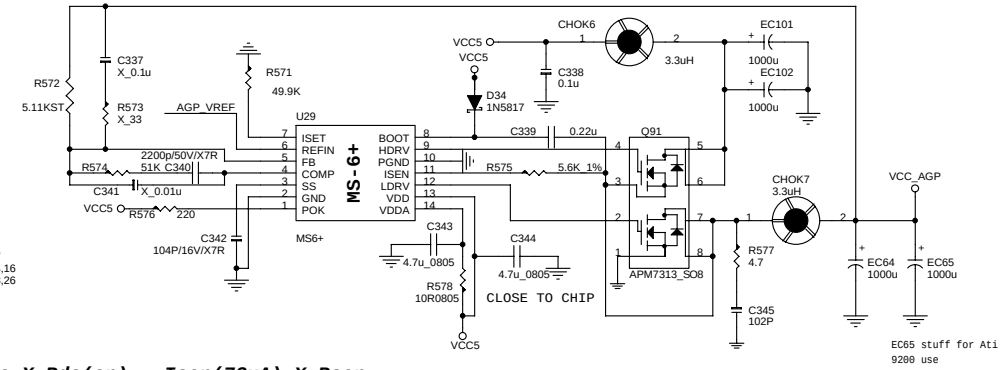

Io X Rds(on) = Isen(72uA) X Rsen
Id = 6A, Id(max) = 24 A
Rds(on)/10V = 21m ohm ~ 28m ohm
Overcurrent (4.7K ohm)= 12A ~ 16A

Micro-Star	Title: **MS-7037**	Rev: **10B**
Document Number: ACPI Controller MS7		
Last Revision Date: Friday, March 03, 2006	Sheet 21 of 28	

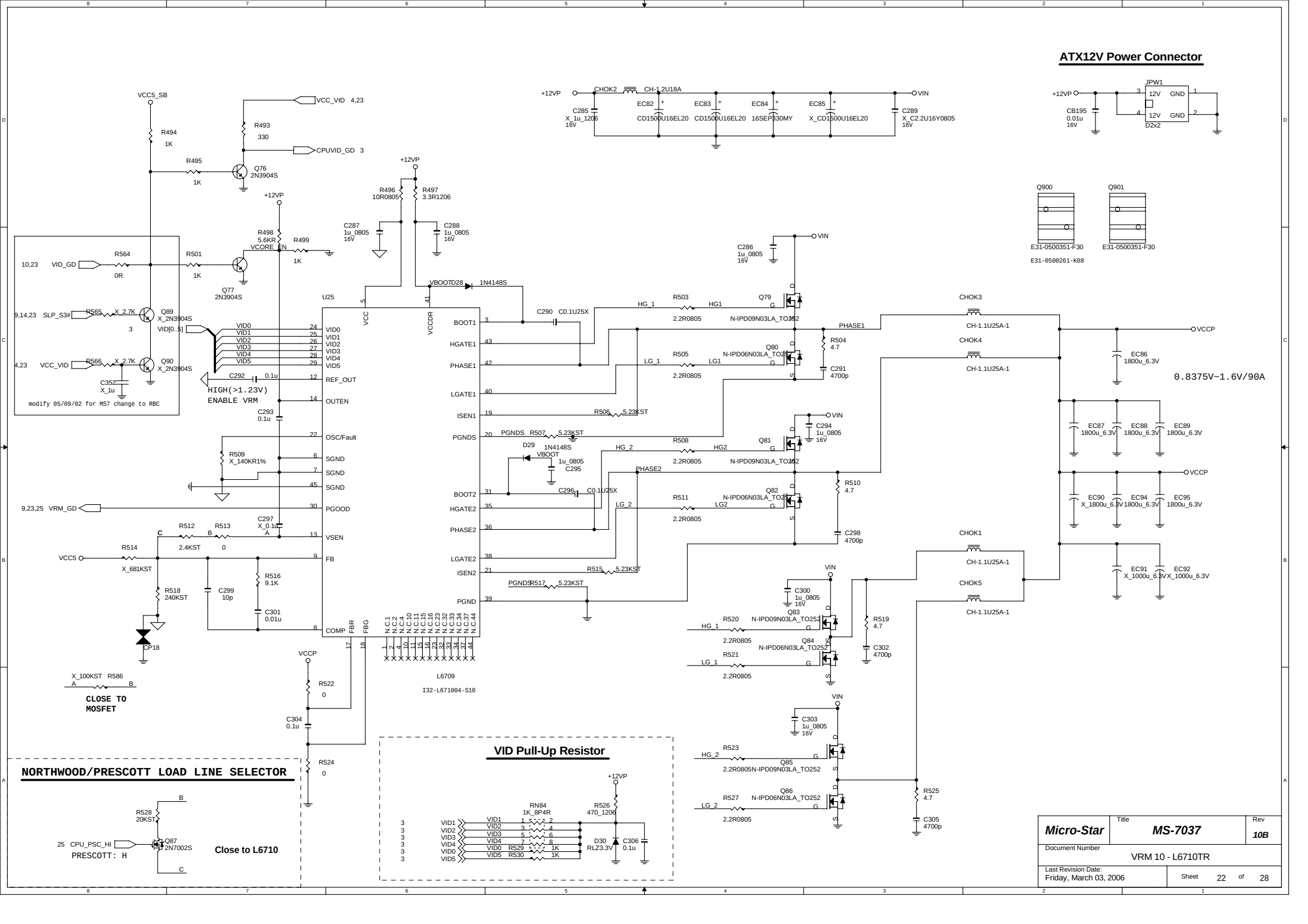
ATX12V Power Connector
JPW1
D2x2
CB195 0.01u 16V
+12VP
CHOK2 CH-1.2U18A
EC82 CD1500U16EL20
EC83 CD1500U16EL20
EC84 16SEP330MY
EC85 X_CD1500U16EL20
C285 X_1u_1206 16V
C289 X_C2.2U16Y0805 16V
VIN
Q900 E31-0500351-F30
Q901 E31-0500351-F30
E31-0500261-K08
VCC5_SB
VCC_VID 4,23
CPUVID_GD 3
R494 1K
R493 330
R495 1K
Q76 2N3904S
R496 10R0805
R497 3.3R1206
C287 1u_0805 16V
C288 1u_0805 16V
R498 5.6KR
VCORE_EN
R499 1K
R501 1K
Q77 2N3904S
10,23 VID_GD
R564 0R
9,14,23 SLP_S3#
R565 X_2.7K
Q89 X_2N3904S
VID[0..5]
4,23 VCC_VID
R566 X_2.7K
Q90 X_2N3904S
C352 X_1u
modify 05/09/02 for MS7 change to RBC
HIGH(>1.23V) ENABLE VRM
C292 0.1u
C293 0.1u
R509 X_140KR1%
9,23,25 VRM_GD
C297 X_0.1u
R512 2.4KST
R513 0
R514 X_681KST
VCC5
R518 240KST
C299 10p
R516 9.1K
C301 0.01u
CP18
X_100KST R586
CLOSE TO MOSFET
U25
VID0 VID1 VID2 VID3 VID4 VID5
REF_OUT
OUTEN
OSC/Fault
SGND
PGOOD
VSEN
FB
COMP
FBR FBG
VCC VCCDR
BOOT1 HGATE1 PHASE1 LGATE1 ISEN1 PGNDS
BOOT2 HGATE2 PHASE2 LGATE2 ISEN2 PGND
L6709
I32-L671004-S10
VBOOTD28 1N4148S
C290 C0.1U25X
R503 2.2R0805
R505 2.2R0805
R506 5.23KST
R507 5.23KST
R508 2.2R0805
R511 2.2R0805
R515 5.23KST
R517 5.23KST
D29 1N4148S
VBOOT 1u_0805 C295
C296 C0.1U25X
C286 1u_0805 16V
Q79 N-IPD09N03LA_TO252
Q80 N-IPD06N03LA_TO252
Q81 N-IPD09N03LA_TO252
Q82 N-IPD06N03LA_TO252
R504 4.7
C291 4700p
C294 1u_0805 16V
R510 4.7
C298 4700p
PHASE1
PHASE2
CHOK3 CH-1.1U25A-1
CHOK4 CH-1.1U25A-1
CHOK1 CH-1.1U25A-1
CHOK5 CH-1.1U25A-1
VCCP
EC86 1800u_6.3V
0.8375V~1.6V/90A
EC87 1800u_6.3V
EC88 1800u_6.3V
EC89 1800u_6.3V
EC90 X_1800u_6.3V
EC94 1800u_6.3V
EC95 1800u_6.3V
EC91 X_1000u_6.3V
EC92 X_1000u_6.3V
C300 1u_0805 16V
Q83 N-IPD09N03LA_TO252
Q84 N-IPD06N03LA_TO252
R520 2.2R0805
R521 2.2R0805
R519 4.7
C302 4700p
C303 1u_0805 16V
Q85 2.2R0805N-IPD09N03LA_TO252
Q86 N-IPD06N03LA_TO252
R523 2.2R0805
R527 2.2R0805
R525 4.7
C305 4700p
R522 0
C304 0.1u
R524 0
NORTHWOOD/PRESCOTT LOAD LINE SELECTOR
R528 20KST
25 CPU_PSC_HI
Q87 2N7002S
PRESCOTT: H
Close to L6710
VID Pull-Up Resistor
RN84 1K_8P4R
R526 470_1206
D30 RLZ3.3V
C306 0.1u
R529 1K
R530 1K
Micro-Star
Title MS-7037
Rev 10B
Document Number VRM 10 - L6710TR
Last Revision Date: Friday, March 03, 2006
Sheet 22 of 28

Intel reference GMCH VTT power cirucit

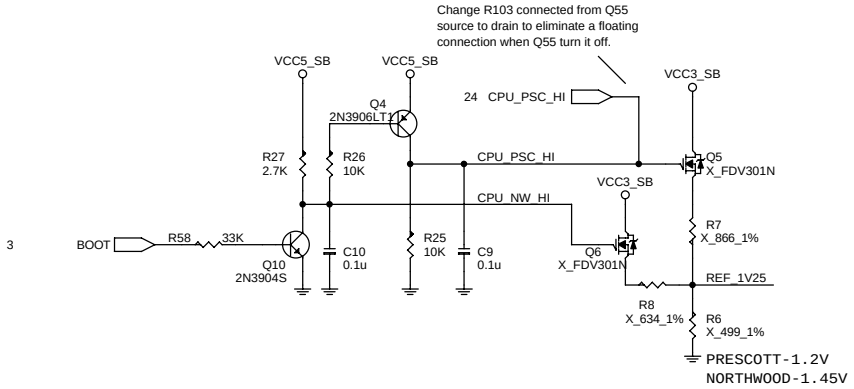

GMCH_VTT ON/OFF CIRCUIT

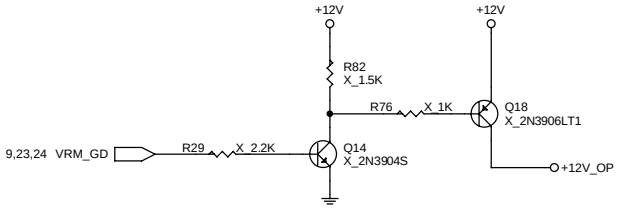

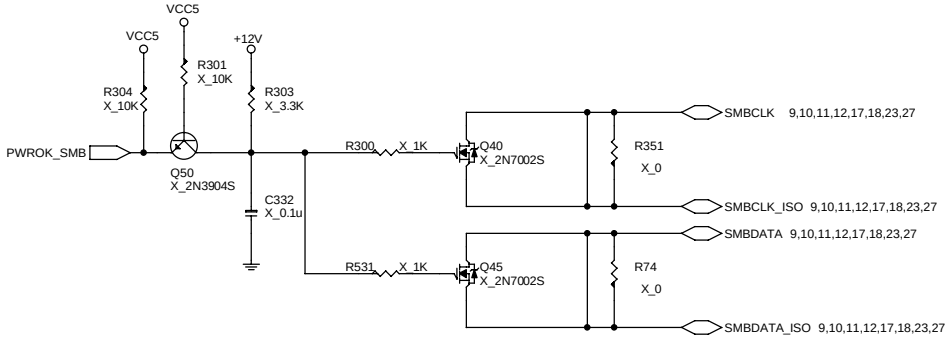

GMCH VTT Generator

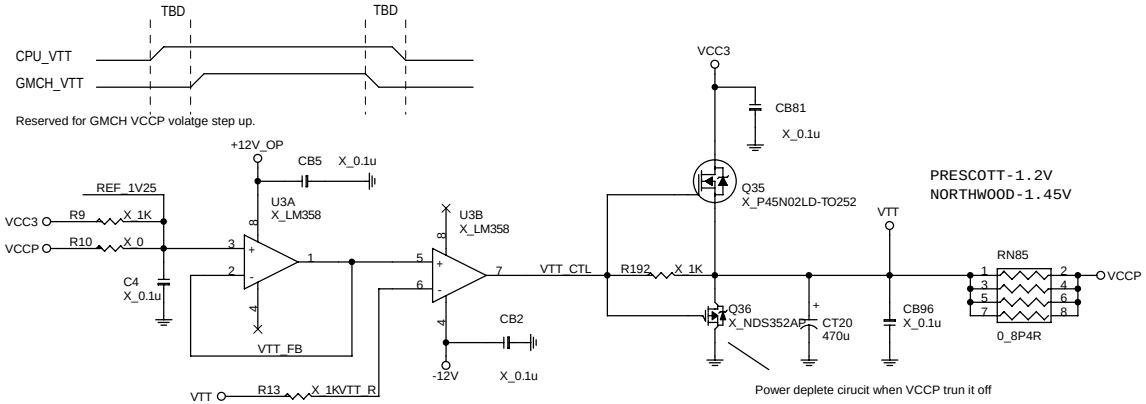

Bootstrip pin are input rather then output on Intel Prescott processor, either it's internal weak pull-up but still need to identify it can be sufficient driving capability for out side ciruit. And the bootstrip pin power by core voltage so the outside cirucit need to adjust the turn off voltage.

Micro-Star	Title: MS-7037	Rev: 10B
Document Number: MEM,VCC_DAC & VTT Controller		
Last Revision Date: Friday, March 03, 2006	Sheet 23 of 28	

1394a OHCI Link Layer Controller

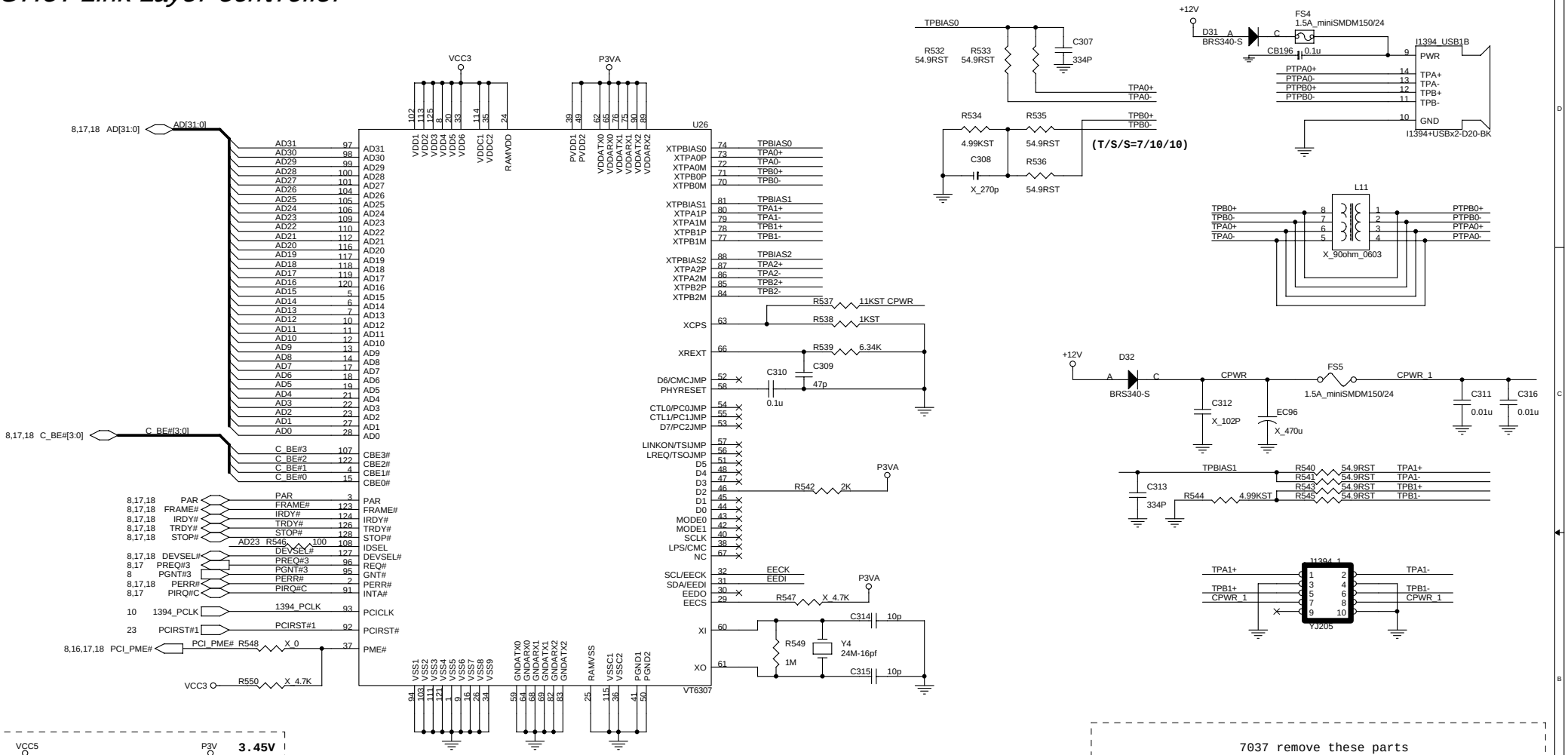

Micro-Star	Title: MS-7037	Rev: 10B
Document Number: VIA 6307/6306		
Last Revision Date: Friday, March 03, 2006	Sheet 24 of 28	

ICH5 STRAPPING RESISTORS

ALL COMPONENTS CLOSE TO ICH5

Trace length is less than 3inchs to ICH5.

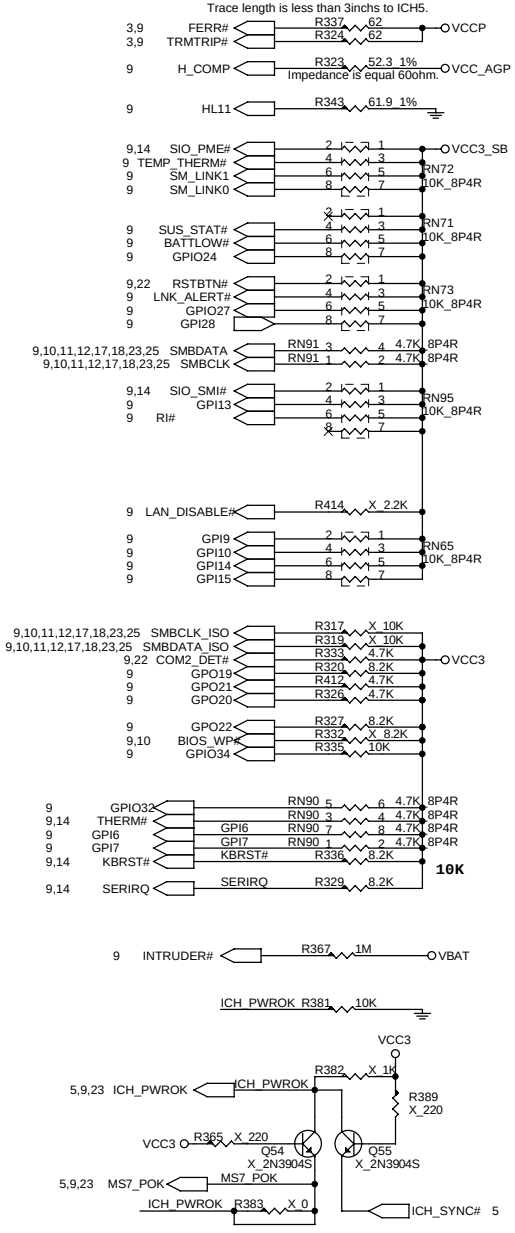

PWR_GD:H &
ICH_SYNC#:H=ICH_PWROK:H

@MACH: Logic AND.
but why short connect the C & E of Q54 ?
Is the MS7_POK connect with the ICH_PWRGD directly?

HSWING Circuit

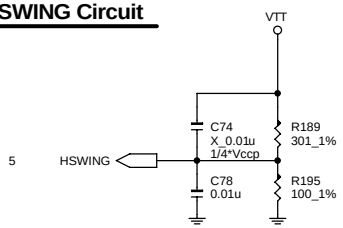

5VREF Sequencing Circuit

@MACH: V5REF is the reference voltage for 5V tolerance on input to the ICH6.
V5REF must be powered up before VCC3 or after VCC3 within 0.7V.
Also ,V5REF must be powered down after VCC3 or before VCC3 within 0.7V

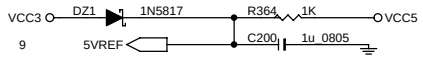

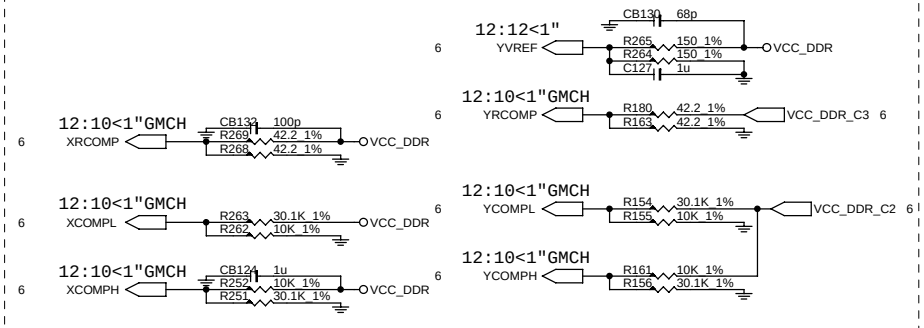

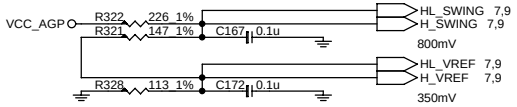

RTC BLOCK

CLR_CMOS		
1 - 2	Normal	*
2 - 3	Clear CMOS	

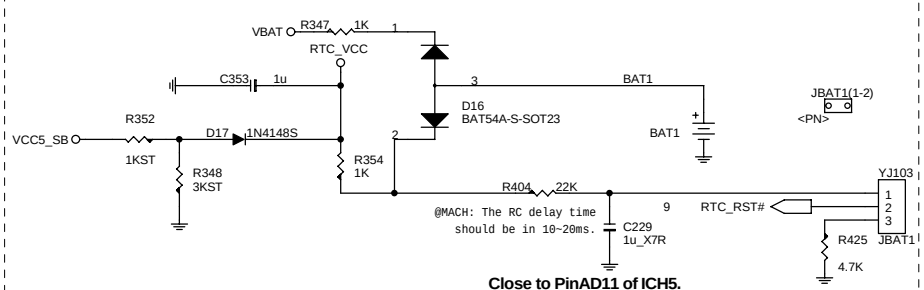

Close to PinAD11 of ICH5.

CPU STRAPPING RESISTORS

ALL COMPONENTS CLOSE TO CPU

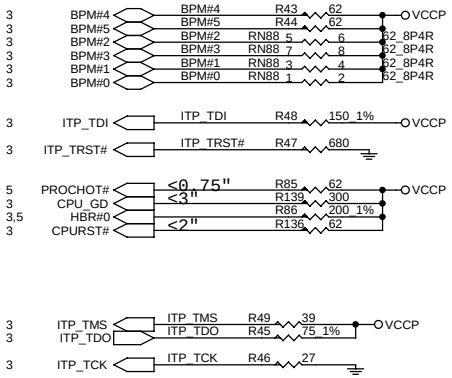

Micro-Star	Title MS-7037	Rev 10B
Document Number PULL HIGH RESISTORS & RTC		
Last Revision Date: Friday, March 03, 2006	Sheet 25 of 28	

ICH5

GPIO Pin	Type	Function	Power well	
GPIO 0	I	PREQ#A	MAIN	
GPIO 1	I	PREQ#B	MAIN	
GPIO 2	I	PIRQ#E	MAIN	
GPIO 3	I	PIRQ#F	MAIN	
GPIO 4	I	PIRQ#G	MAIN	
GPIO 5	I	PIRQ#H	MAIN	
GPIO 6	I	GPI6	MAIN	
GPIO 7	I	GPI7	MAIN	
GPIO 8	I	**SIO_PME#**	RESUME	
GPIO 9	I	OC4#	RESUME	
GPIO 10	I	OC5#	RESUME	
GPIO 11	I	**TEMP_THERM#**	RESUME	
GPIO 12	I	**SIO_SMI#**	RESUME	
GPIO 13	I	GPI13	RESUME	
GPIO 14	I	OC#6	RESUME	
GPIO 15	I	OC#7	RESUME	
GPIO 16	O	PGNT#A	MAIN	
GPIO 17	O	PGNT#B	MAIN	
GPIO 18	O	GPO18	MAIN	
GPIO 19	O	GPO19	MAIN	
GPIO 20	O	GPO20	MAIN	
GPIO 21	O	GPO21	MAIN	
GPIO 22	OD	GPO22	MAIN	
GPIO 23	O	**BIOS_WP#**	MAIN	
GPIO 24	I/O	GPIO24	RESUME	default output
GPIO 25	I/O	**LAN_DISABLE#**	RESUME	default output
GPIO 27	I/O	GPIO27	RESUME	default output
* GPIO 28	I/O	GPIO28	RESUME	default output
GPIO 32	I/O	GPIO32	MAIN	default output
GPIO 33	I/O	**COM2_DET#**	MAIN	default output
GPIO 34	I/O	GPIO34	MAIN	default output
GPIO 40	I	PREQ#4	MAIN	
GPIO 41	I	GPI41	MAIN	
GPIO 48	O	PGNT#4	MAIN	
GPIO 49	OD	CPU_GD	MAIN	

PCI Config.

DEVICE	MCP1 INT Pin	REQ#/GNT#	IDSEL	CLOCK
PCI Slot 1	PIRQ#G PIRQ#H PIRQ#E PIRQ#F	PCI_REQ#0 PCI_GNT#0	AD26	PCICLK0
PCI Slot 2	PIRQ#F PIRQ#G PIRQ#H PIRQ#E	PCI_REQ#4 PCI_GNT#4	AD25	PCICLK1
PCI Slot 3	PIRQ#E PIRQ#F PIRQ#G PIRQ#H	PCI_REQ#2 PCI_GNT#2	AD28	PCICLK2
LAN	PIRQH	PCI_REQ#1 PCI_GNT#1	AD29	LAN_PCLK
1394	PIRQC	PCI_REQ#3 PCI_GNT#3	AD23	1394_PCLK

DDR DIMM Config.

DEVICE	ADDRESS	CLOCK
DIMM 1	AOH	MCLK_A0/MCLK_A#0 MCLK_A1/MCLK_A#1 MCLK_A2/MCLK_A#2
DIMM 2	A4H	MCLK_B0/MCLK_B#0 MCLK_B1/MCLK_B#1 MCLK_B2/MCLK_B#2

JUMPER SETTING

JBAT1	(1-2)NORMAL	(2-3)CLEAR
JAUD1	(5-6) (9-10) W/O FRONT AUDIO	WITH FRONT AUDIO

SIO

PIN NAME	USAGE	Input/Output	NOTES
GPIO10	UNUSED	INPUT	
GPIO11	UNUSED	INPUT	
GPIO12	UNUSED	INPUT	
GPIO13	UNUSED	INPUT	
GPIO14	UNUSED	OUTPUT	
GPIO15	VID5	INPUT	Low: VID add 0.0125V , High :by pass
GPIO16	UNUSED	OUTPUT	
GPIO17	UNUSED	OUTPUT	
GPIO20	UNUSED	OUTPUT	
GPIO21	SMBCLK_ISO	INPUT	SMBUS CLOCK
GPIO22	SMBDATA_ISO	INPUT / OUTPUT	SMBUS DATA
GPIO23	POWER_LED	OUTPUT	Default used MS-5
GPIO24	UNUSED	OUTPUT	
GPIO25	UNUSED	OUTPUT	IRRX
GPIO26	UNUSED	OUTPUT	
GPIO27	UNUSED	OUTPUT	
GPIO30	SLP_S3#	INPUT	S3 state indicator signal
GPIO31	PS_ON#	OUTPUT	Connector to Power Supply to turn on Power.
GPIO32	UNUSED	OUTPUT	
GPIO33	UNUSED	OUTPUT	
GPIO34	UNUSED	OUTPUT	
GPIO35	UNUSED	OUTPUT	

PCI RESET DEVICE

Signals	Target
PCIRST#1	LAN,1394
PCIRST#2	Super I/O,AGP slot
PCIRST#3	PCI1~3
PCIRST_ICH5#	Northbridge , FWH
HDDRST#	Primary, Scondary IDE

Micro-Star	Title ***MS-7037***	Rev ***10B***
Document Number GPIO & JUMPER SETTING		
Last Revision Date: Friday, March 03, 2006	Sheet 26 of 28	

POWER DELIVERY MAP

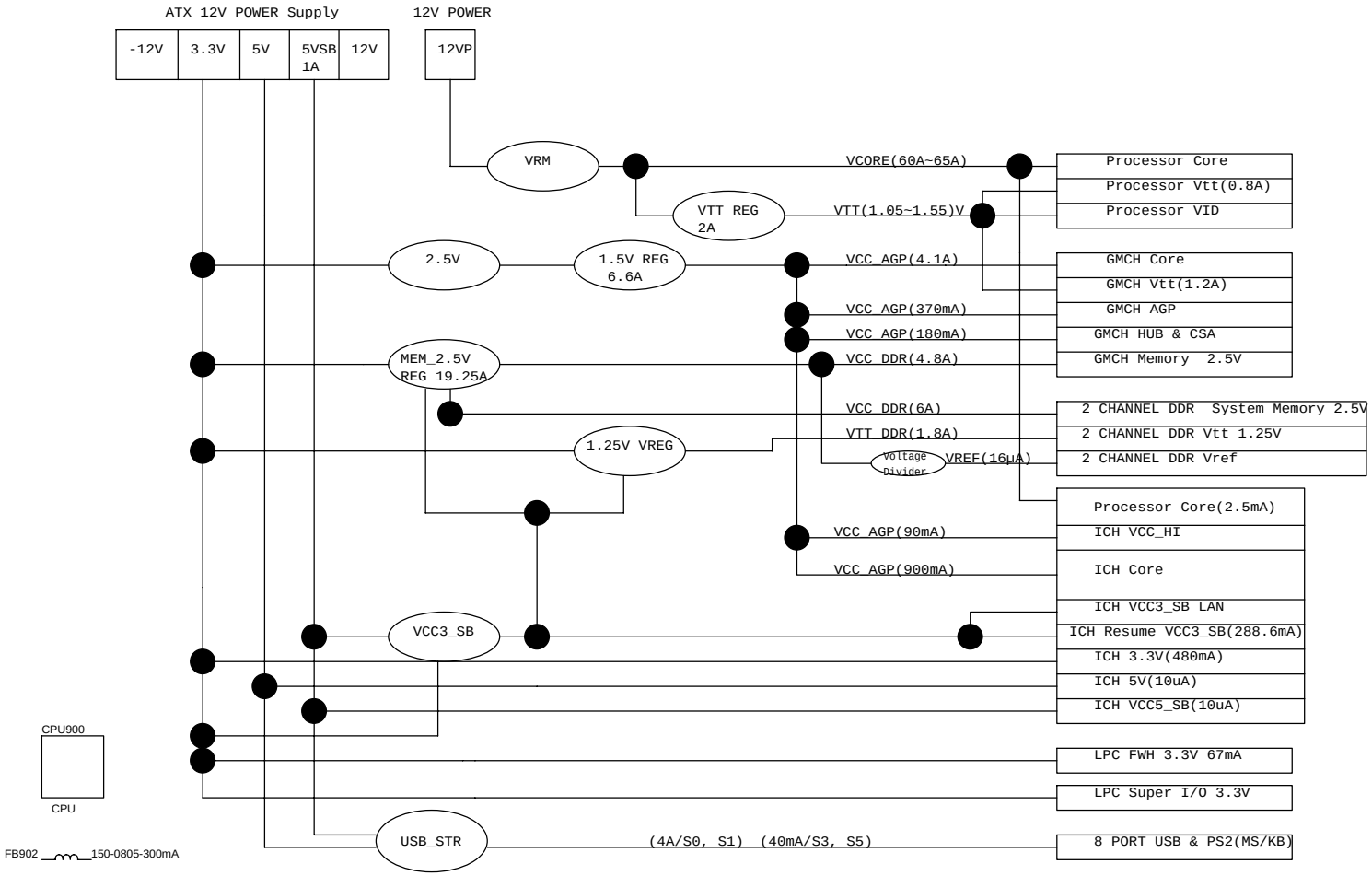

FB902 150-0805-300mA

CT900 100u-1210

C900 1u

C901 0.1u

8110S FB901 60s_0603

8110S FB900 80-0805-3A

Lan R900 2.49K

865PE R901 0

R902 133RST

U9_848P 82848P

U9_PE 82865PE

U9_GV 82865GV

U901 8110S

U900 6307

7037 PART

CPU1_M 478-FAN Retention Module CPU_Retention

U9_7-8 MCH-HS-JP

U9_3-4 MCH-HS-JP

PCB1 7037-100

PCB2 7037-10A

BIOS1_X X_YSKT32PLCC

BIOS1_2M X_SST49LF002A

BAT1_1

USB1_N without LAN

U9_X1 7165Heatsink

U9_X Heatsink

LAN_USB1_S1 gigabite

TABEL-GLS
865GM3-LS 010
865GM3-LS

TABEL-VLS
865GVM2-LS 020
865GVM2-LS

TABEL-GFIS
865GM3-FIS 030
865GM3-FIS

TABEL-PILS
865PEM3-ILS 040
865PEM3-ILS

TABEL-VFIS
865GVM2
865GVM2

Micro-Star	Title: MS-7037	Rev: 10B
Document Number: POWER DELIVERY MAP & MANUAL PART		
Last Revision Date: Friday, March 03, 2006	Sheet 27 of 28	

Revision History (Changes from Rev 0A)

10A->10B	ADD EC68,EC76,EC77,FB903,C902,C903

Micro-Star	Title MS-7037	Rev 10B
Document Number REVISION HISTORY		
Last Revision Date: Friday, March 03, 2006	Sheet 28 of 28	